RAIL CSN
CSN CHANNEL

GS
PG

legrand® CABLE MANAGEMENT

FT0101-1	01/22

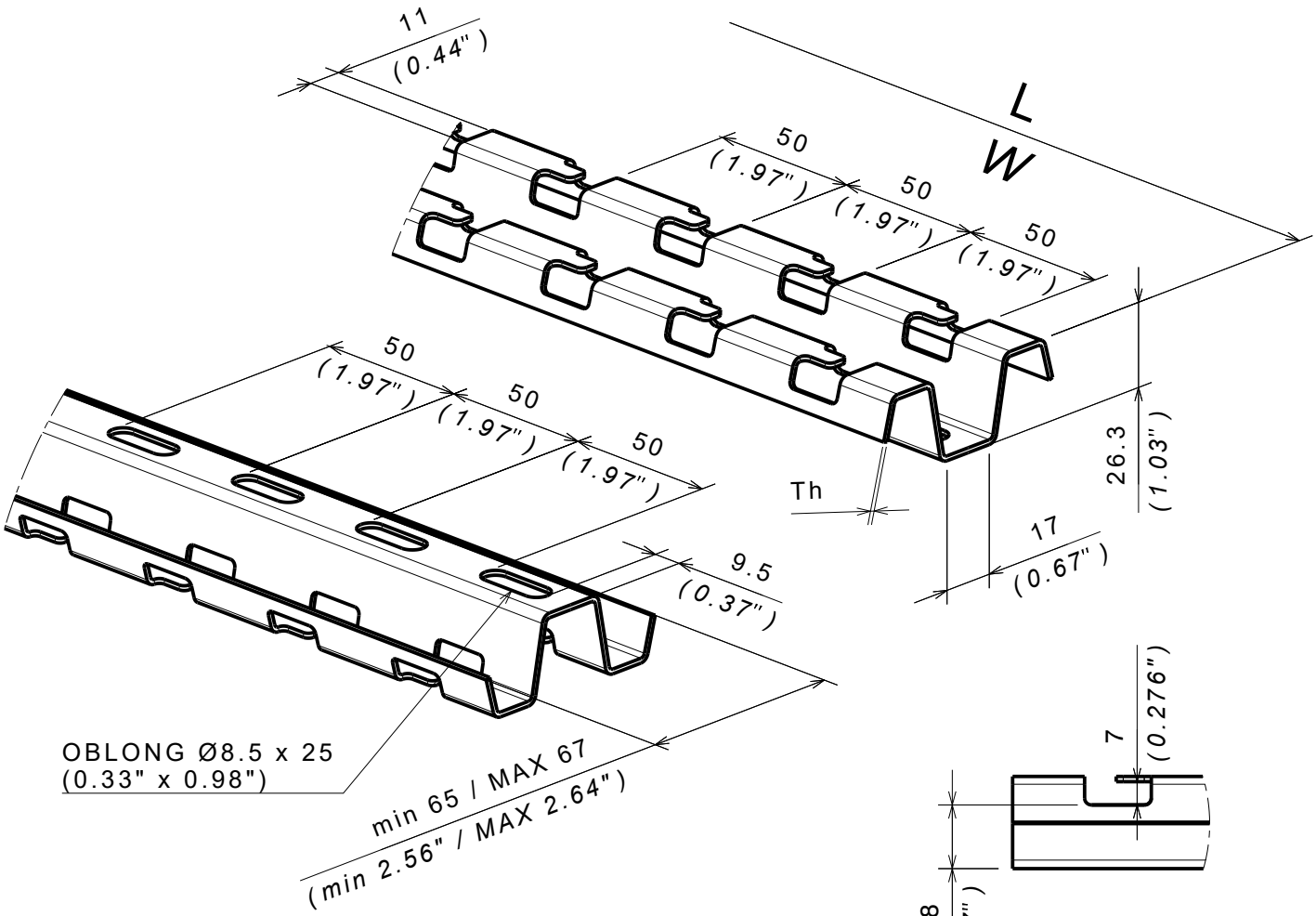

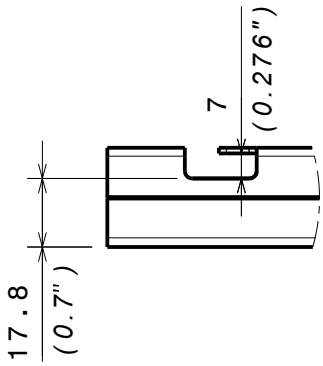

REF	CODE	POIDS (Kg/u)	/WEIGHT (lb/u)	L (mm)	W (inch)
RCSN 150	013 150	0.170	*0.380*	144	*5.670*
RCSN 200	013 200	0.230	*0.510*	194	*7.640*
RCSN 300	013 300	0.349	*0.770*	294	*11.57*
RCSN 400	013 400	0.468	*1.030*	394	*15.51*
RCSN 500	013 500	0.587	*1.300*	494	*19.45*
RCSN 550	013 550	0.665	*1.470*	544	*21.43*
RCSN 600	013 600	0.706	*1.560*	594	*23.39*
RCSN 700	013 700	0.790	*1.742*	694	*27.32*
RCSN 1000	013 010	1.180	*2.610*	994	*39.13*
RCSN 2000	013 020	2.370	*5.230*	1994	*78.50*
RCSN 3000	013 030	3.560	*7.860*	2994	*117.9*

EPAISSEUR / THICKNESS	*NORMES / STANDARD*
1.5 *(0.06")*	
MATIERE / MATERIAL DX 51 D Z275 MAC	EN 10346
PROTECTION / COATING GS / PG	

Propriété exclusive de LEGRAND, ne peut être ni copié, ni transmis à des tiers sans autorisation écrite.

Exclusive property of LEGRAND shouldn't be reproduced or transmitted to any people without written authorization