FiberRunner to ADC FiberGuide Adapters

For use with Panduit FiberRunner 4x4, 6x4, & 12x4 Cable Routing Systems

Part Number(s): FRADC4X4**, FRADC12X4BL, & FRADC6X4

© Panduit Corp. 2018

INSTALLATION INSTRUCTIONS

RW151C

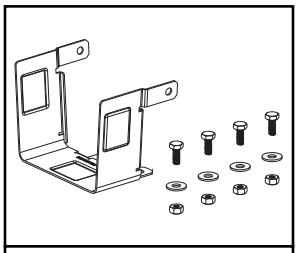

FRADC4X4**

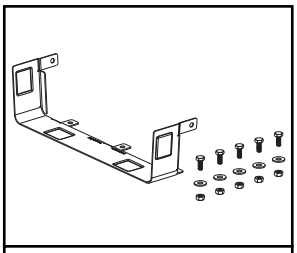

FRADC12X4BL

1

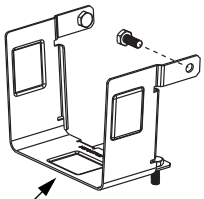

FRADC4X4**
or
FRADC12X4BL

2

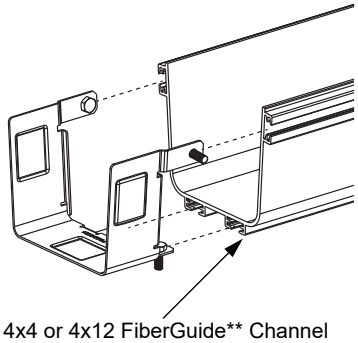

ADC* 4x4 or 4x12 FiberGuide** Channel

3

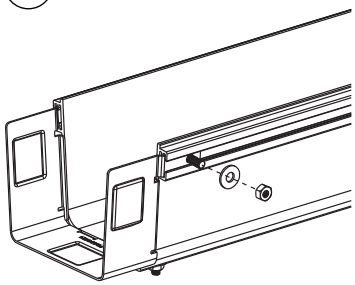

4

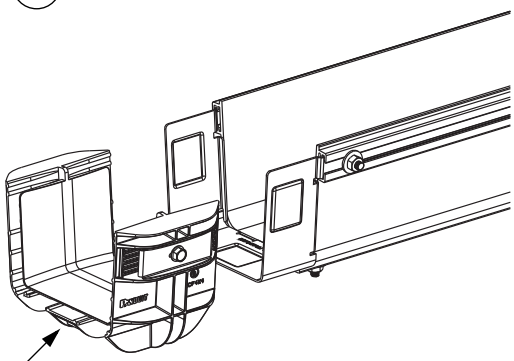

FRBC4X4
or
FRBC12X4

5

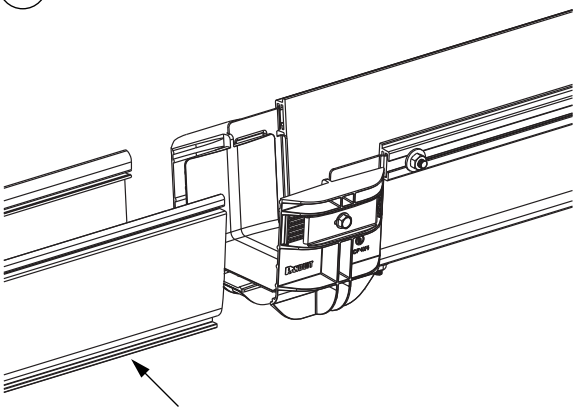

FR4X4
or
FR12X4

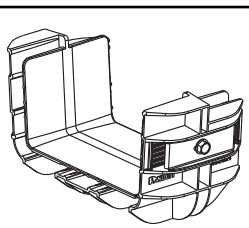

FRADC6X4

1

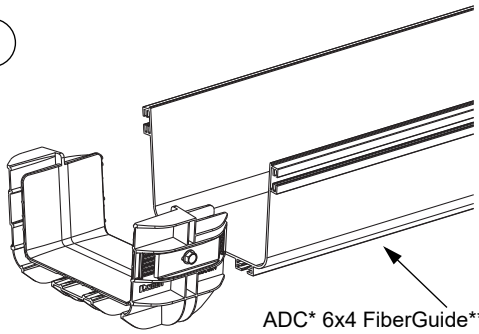

ADC* 6x4 FiberGuide** Channel

2

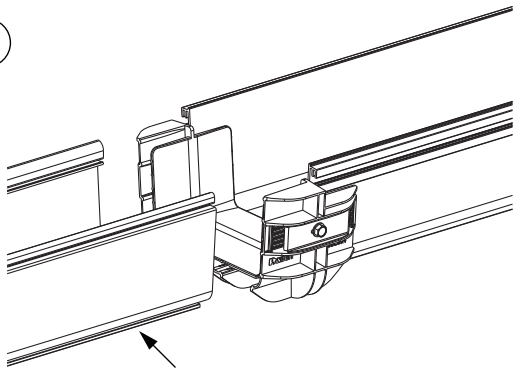

FR6X4

* ADC is a registered trademark of ADC Telecommunications, Inc.
** FiberGuide is a registered trademark of ADC Telecommunications, Inc.

For Instructions in Local Languages and Technical Support:
www.panduit.com/resources/install_maintain.asp

www.panduit.com

E-mail:
techsupport@panduit.com

Phone:
866-405-6654

Rev. 09