PANDUIT P/N	WEIGHT
MA005	0.5kg

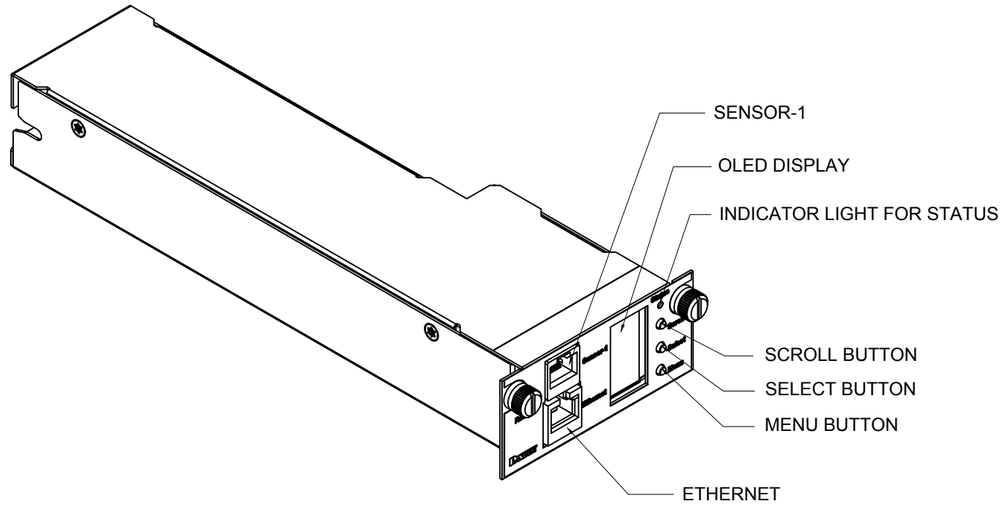

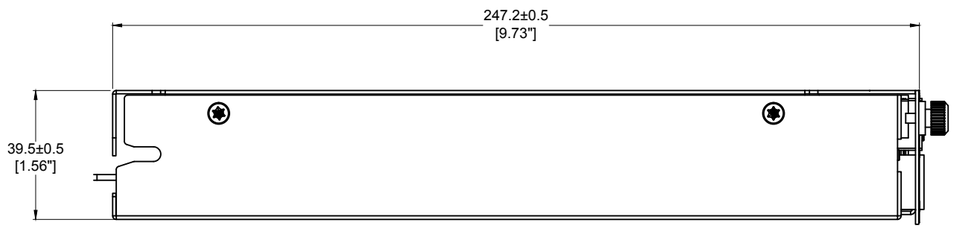

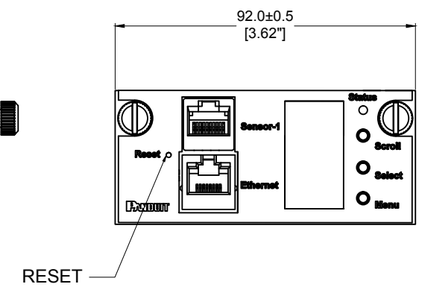

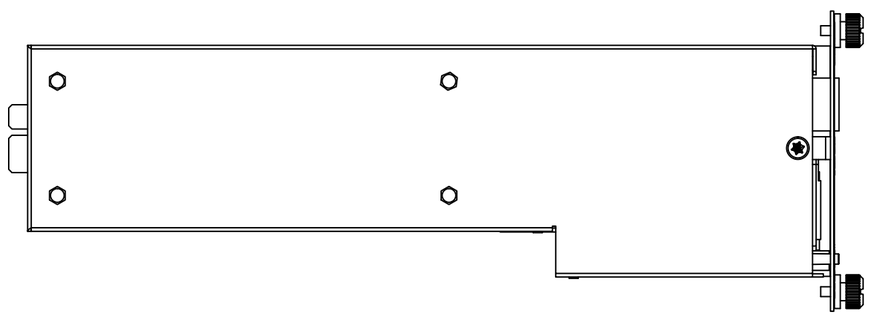

SPECIFICATION:

1. STANDARD

OPERATING RANGE:	0° - 65°C [32° - 149°F]
DATA INTERFACE:	RJ45 COMPLIANT
UPDATE INTERFACE:	USB

2. ADDITIONAL
   NONE

3. ACCESSORY COMPONENTS
   INSTALLATION MANUAL, QTY: (1)
   USB FLASH DISK, QTY: (1)

NOTES:
1. PRIMARY DIMENSIONS ARE IN MILLIMETERS. SECONDARY DIMENSIONS ARE IN INCHES
2. INSTALLATION SHALL COMPLY WITH ALL APPLICABLE STATE AND LOCAL CODES
3. VISIT OUR ON-LINE CATALOG AT WWW.PANDUIT.COM FOR A CURRENT LIST OF PRODUCTS APPLICABLE FOR USE WITH THIS PART

IDENTIFICATION

PART NUMBER	DESCRIPTION
MA005	SMARTZONE G5 iNC INTELLIGENT NETWORK CONTROLLER, HORIZONTAL PDU

REV	DATE	BY	CHK	APR	DESCRIPTION	ECN
00A	09/04/2018	Di.Zhai	MIM	DJB	INITIAL RELEASE	MA005

WE ASK THAT YOU CHECK FULLY THE DIMENSIONS, NOTES, AND SIGN THE CLIENT SIGNATURE BOX.
THE JOB WILL NOT PROGRESS WITHOUT SIGNED APPROVAL. PLEASE DO NOT DELAY IN RETURNING PROOF AS IT WILL AFFECT DELIVERY

SIGN
DATE
PRINT

TITLE:
SMARTZONE G5 iNC INTELLIGENT NETWORK CONTROLLER, HORIZONTAL PDU
CUSTOMER DRAWING

ITEM REVISION NAME:

DATASHEET FILE NAME:

PANDUIT

UNLESS OTHERWISE SPECIFIED
DIMENSIONAL TOLERANCE ARE: mm [IN]

THIRD ANGLE PROJECTION

	Tolerance(mm)
0<L<50	±0.5
50<L<250	±1.0
250<L<500	±1.5

MATERIAL/COLOR: N/A

DRAWING NUMBER: MA005_DC

DRAWN BY	DATE	CHK	SCALE		SCALE
Di.Zhai	09/04/2018	MIM	NONE	SHT 1 OF 1	B