THIS COPY IS PROVIDED ON A RESTRICTED BASIS AND IS NOT TO BE USED IN ANY WAY DETRIMENTAL TO THE INTERESTS OF PANDUIT CORP.

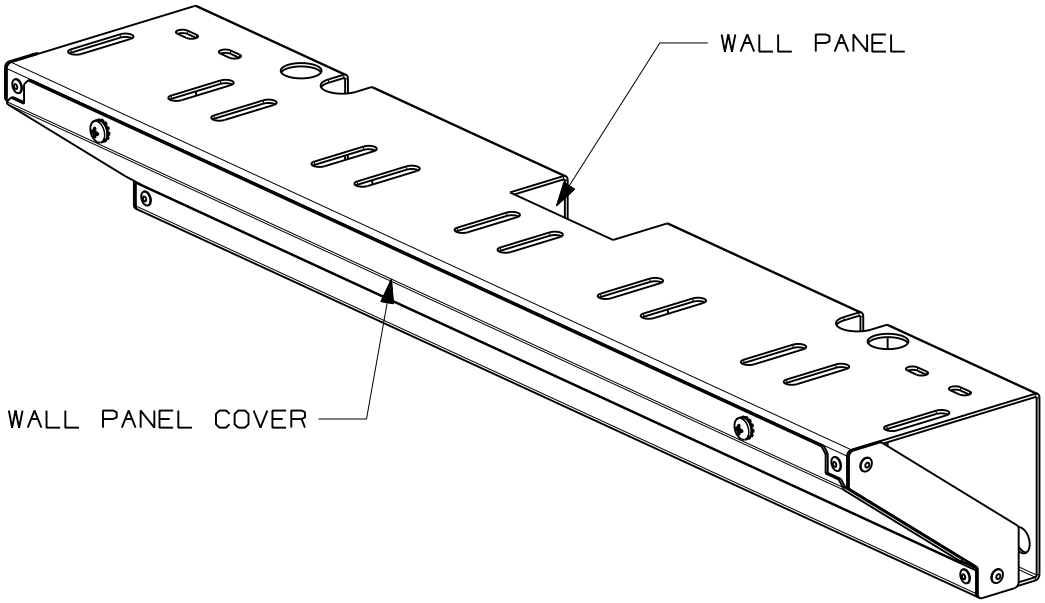

NOTES:
1. VISIT OUR ONLINE CATALOG AT WWW.PANDUIT.COM FOR A LIST OF CURRENT PARTS APPLICABLE FOR USE WITH THIS PRODUCT.
2. PRIMARY DIMENSIONS ARE METRIC (mm). DIMENSIONS IN PARENTHESES ARE IN INCHES (IN).
3. FIRE RATING: NON-METALLIC PARTS ARE CONSTRUCTED WITH FLAME RETARDANT MATERIALS HAVING A MAXIMUM FLAME SPREAD OF 50 AND A MAXIMUM SMOKE DEVELOPMENT OF 450 IN ACCORDANCE WITH ASTM E84 AND UL 723.
4. PARTS SUPPLIED:
   1 - WALL PANEL
   1 - WALL PANEL COVER
   1 - HARDWARE KIT

PANDUIT PART NO.	FOR USE WITH CABINET WIDTH
C2CAC06F08WPxx	600mm
C2CAC07F08WPxx	700mm
C2CAC08F08WPxx	800mm

*xx = COLOR
B1 = BLACK
W1 = WHITE

REV	DATE	BY	CHK	APR	DESCRIPTION	ECN
00A	10/15/12	PJST			RELEASED TO PRODUCTION	12V292DR

*****

NET-CONTAIN™ WALL PANEL FOR N AND S TYPE CABINETS (C2CAC0*F08WP**)

CUSTOMER DRAWING

ITEM REVISION NAME: 12V292DR/00

DATASET FILE NAME: 12V292DR_DC/00A

PANDUIT™

MATERIAL: N/A

DRAWING NUMBER: 12V292DR

DRAWN BY	DATE	CHK	SCALE		SIZE
PJST	10/15/12		N/A	SHT 1 OF 2	A

D10100DA/12

THIS COPY IS PROVIDED ON A RESTRICTED BASIS AND IS NOT TO BE USED IN ANY WAY DETRIMENTAL TO THE INTERESTS OF PANDUIT CORP.

PANDUIT PART NO.	FOR USE WITH CABINET WIDTH	HEIGHT	WEIGHT
C2CAC06F08WPxx	600mm	89mm (3.5")	2.3 Kg (5.1 LBS) EA.
C2CAC07F08WPxx	700mm	89mm (3.5")	2.8 Kg (6.1 LBS) EA.
C2CAC08F08WPxx	800mm	89mm (3.5")	3.2 Kg (7.0 LBS) EA.

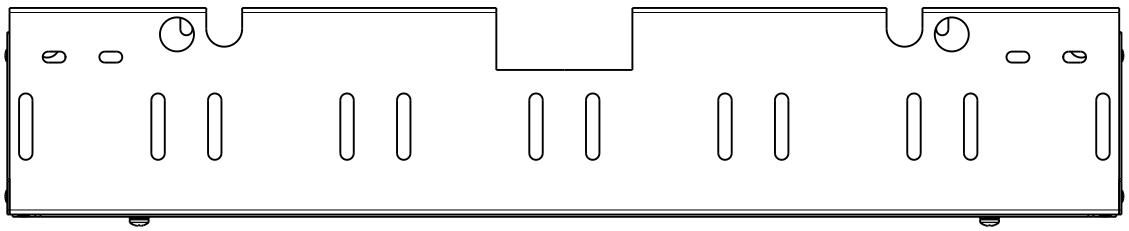

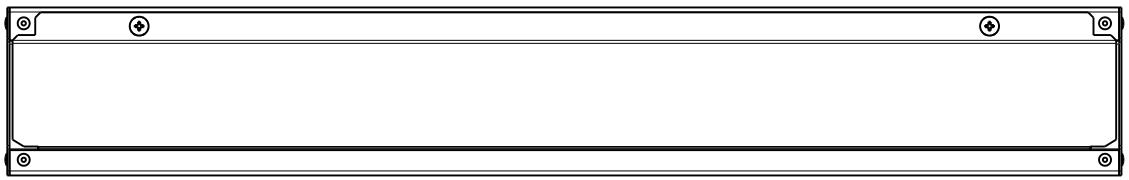

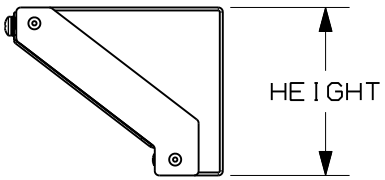

REV	DATE	BY	CHK	APR	DESCRIPTION	ECN
00A	10/15/12	PJST			RELEASED TO PRODUCTION	12V292DR

TITLE

NET-CONTAIN™ WALL PANEL
FOR N AND S TYPE CABINETS
(C2CAC0*F08WP**)
CUSTOMER DRAWING

ITEM REVISION NAME: 12V292DR/00

DATASET FILE NAME: 12V292DR_DC/00A

PANDUIT™

MATERIAL: N/A

DRAWING NUMBER: 12V292DR

DRAWN BY	DATE	CHK	SCALE		SIZE
PJST	10/15/12		N/A	SHT 2 OF 2	A

D10100DA/12