legrand® CABLE MANAGEMENT

21500 MONTBARD
Phone : 03.80.89.58.15 - Fax : 03.80.92.09.67

REHAUSSE R35
R35 STAND OFF BRACKET

Reference(s) : 586 650/54/57

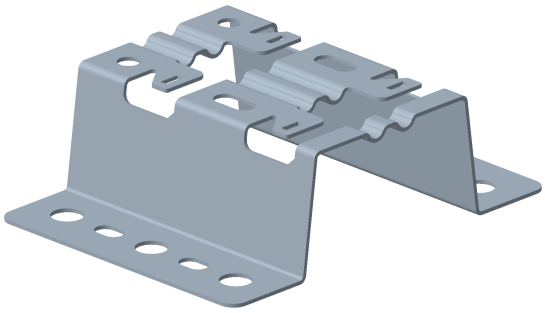

1. RANGE

Designation	Code	Poids* / *Weight** (Kg)	(lb)	Epaisseur / *Thickness* (mm)	(inch)	Matière / *Material*	Norme / *Standard*	Finition / *Coating*	Norme / *Standard*
R35 GS	586 650	0.145	*0.320*	1.2	*0.05"*	DX 51 D Z275 MAC	EN 10346	GS / *PG*	Class 3 / IEC 61537
R35 ZnMg	586 657	0.145	*0.320*	1.2	*0.05"*	DX 51 D ZM	EN 10346	ZnMg	Class 8 / IEC 61537
R35 SS316L	586 654	0.148	*0.327*	1.2	*0.05"*	X2 Cr Ni Mo 17-12-2	EN 10088-2	INOX316L / *SS316L*	Class 9D / IEC 61537

2. DIMENSIONS (mm/*inch*)

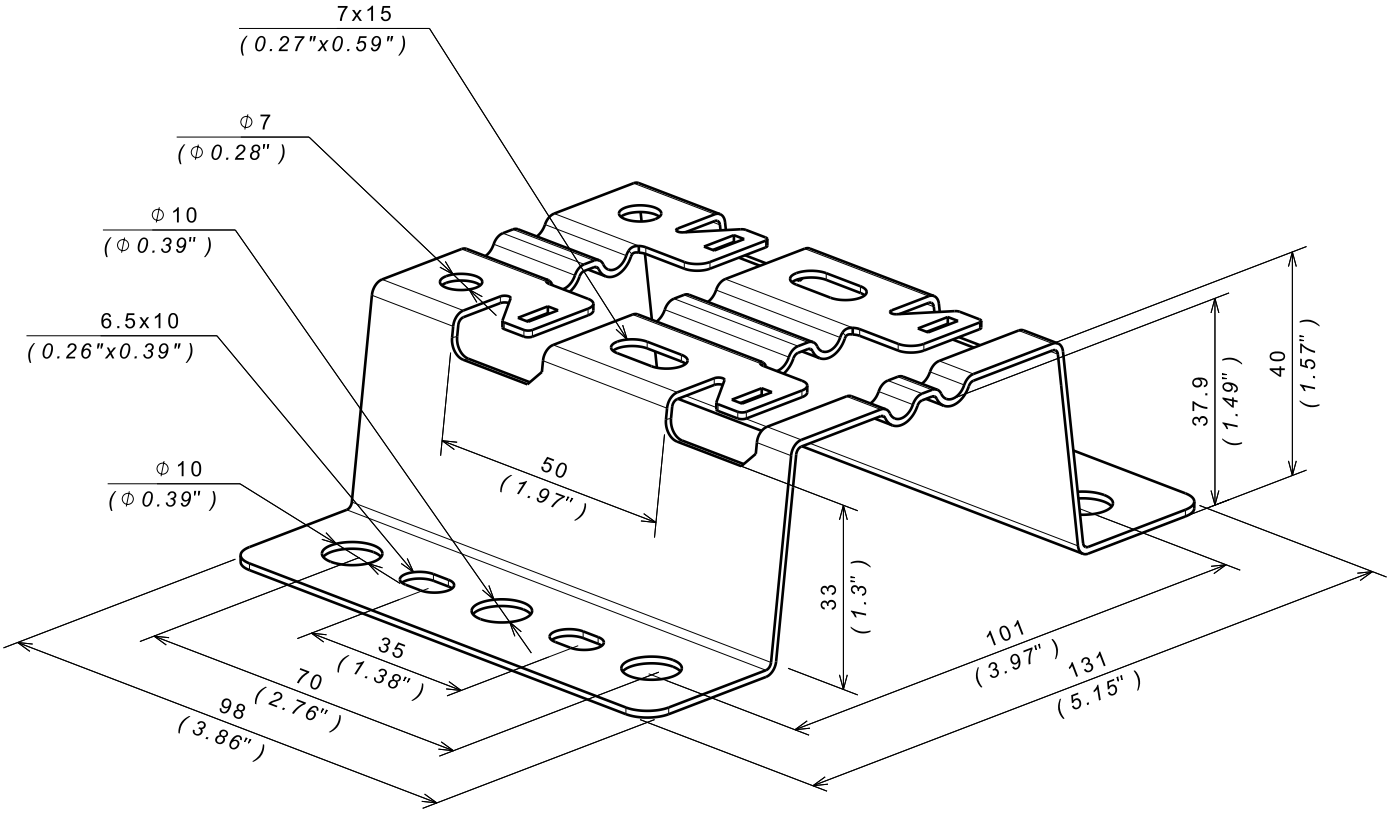

legrand® CABLE MANAGEMENT

21500 MONTBARD
Phone : 03.80.89.58.15 - Fax : 03.80.92.09.67

REHAUSSE R35
R35 STAND OFF BRACKET

Reference(s) : 586 650/54/57
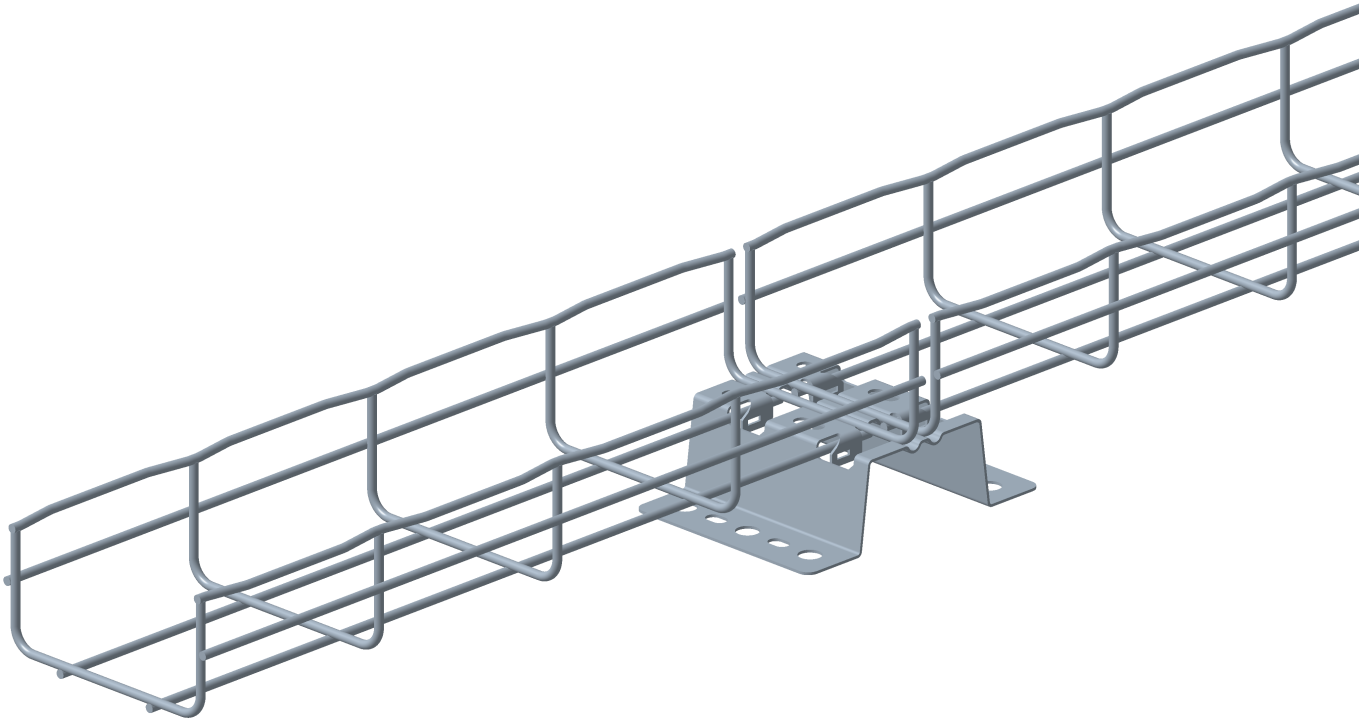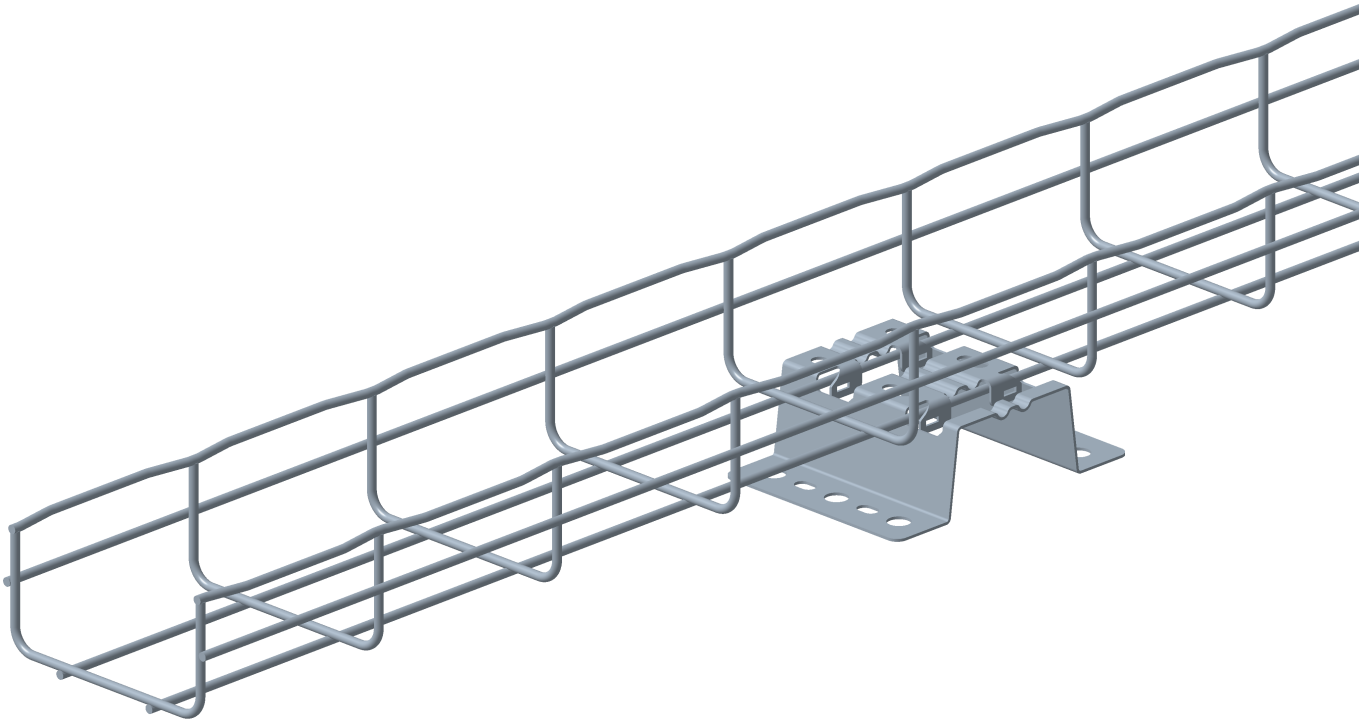
3. INSTALLATION