THIS COPY IS PROVIDED ON A RESTRICTED BASIS AND IS NOT TO BE USED IN ANY WAY DETRIMENTAL TO THE INTERESTS OF PANDUIT CORP.

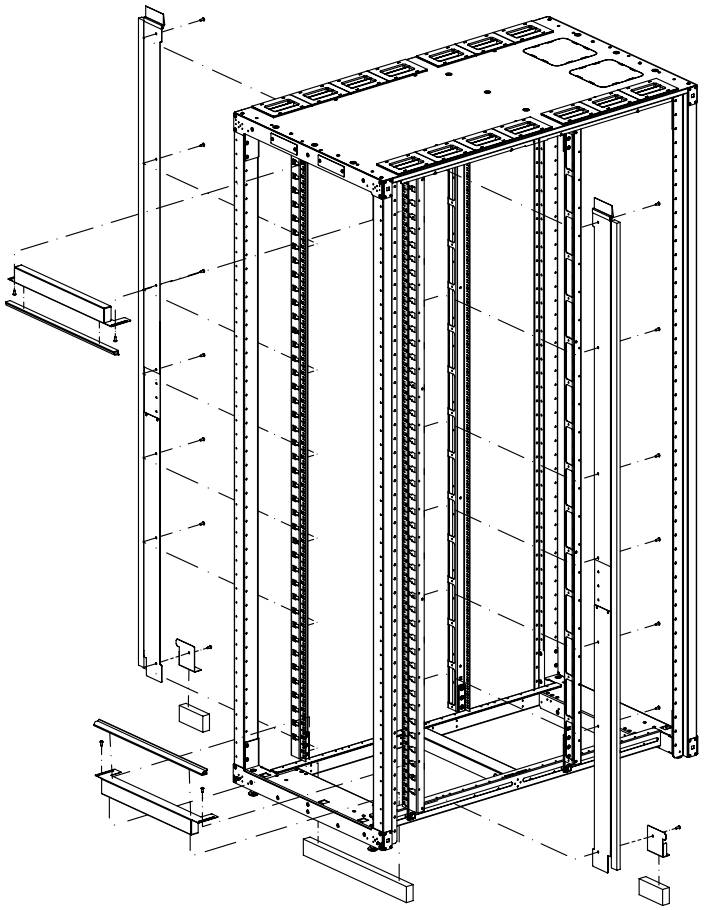

*APPLICATION VIEW*
*CABINET NOT INCLUDED*

| PANDUIT PART NO. | WEIGHT |
|---|---|
| S7VBPN | 18.0 LBS/EACH<br>8.1 Kg/EACH |

1. VISIT OUR ON-LINE CATALOG AT WWW.PANDUIT.COM FOR A LIST OF CURRENT PARTS APPLICABLE FOR USE WITH THIS PRODUCT.
2. DIMENSIONS IN PARENTHESES ARE METRIC [mm].
3. VERTICAL BLANKING PANELS BLOCK BYPASS AIR AND DIRECT COLD AIRFLOW THROUGH EQUIPMENT.
4. PARTS SUPPLIED:
   - 1- 42-48RU RIGHT VERTICAL BLANKING PANEL
   - 1- 42-48RU LEFT VERTICAL BLANKING PANEL
   - 2- HORIZONTAL BLANKING PANEL
   - 1- HARDWARE AND SEAL KIT
   - 1- INSTRUCTION SHEET
5. FULLY BONDED STRUCTURE WHEN ASSEMBLED PER INSTRUCTIONS.

| REV | DATE | BY | CHK | APR | DESCRIPTION | ECN |
|---|---|---|---|---|---|---|
| 01A | 11-22-13 | PBS | ROJC | JDWE | RELEASED TO PRODUCTION | 13V379TU-DC |

TITLE

S7VBPN

CUSTOMER DRAWING

ITEM REVISION NAME: 13V379TU/01.PRT

DATASET FILE NAME: 13V379TU_DC/01A.PRT

UNLESS OTHERWISE SPECIFIED, DIMENSIONAL TOLERANCES ARE:

| INCHES | | METRIC - MILLIMETER | | ANGLE |
|---|---|---|---|---|
| X.X | +/- 0.03 | X. | +/- 0.8 | +/- 1° |
| X.XX | +/- 0.018 | X.X | +/- 0.46 | |
| X.XXX | +/- 0.007 | X.XX | +/- 0.18 | |

THIRD ANGLE PROJECTION

MATERIAL/COLOR: N/A

DRAWING NUMBER: 13V379TU-DC

| DRAWN BY | DATE | CHK | SCALE | | SIZE |
|---|---|---|---|---|---|
| PBS | 11-22-13 | ROJC | NONE | SHT 1 OF 2 | A |

THIS COPY IS PROVIDED ON A RESTRICTED BASIS AND IS NOT TO BE USED IN ANY WAY DETRIMENTAL TO THE INTERESTS OF PANDUIT CORP.

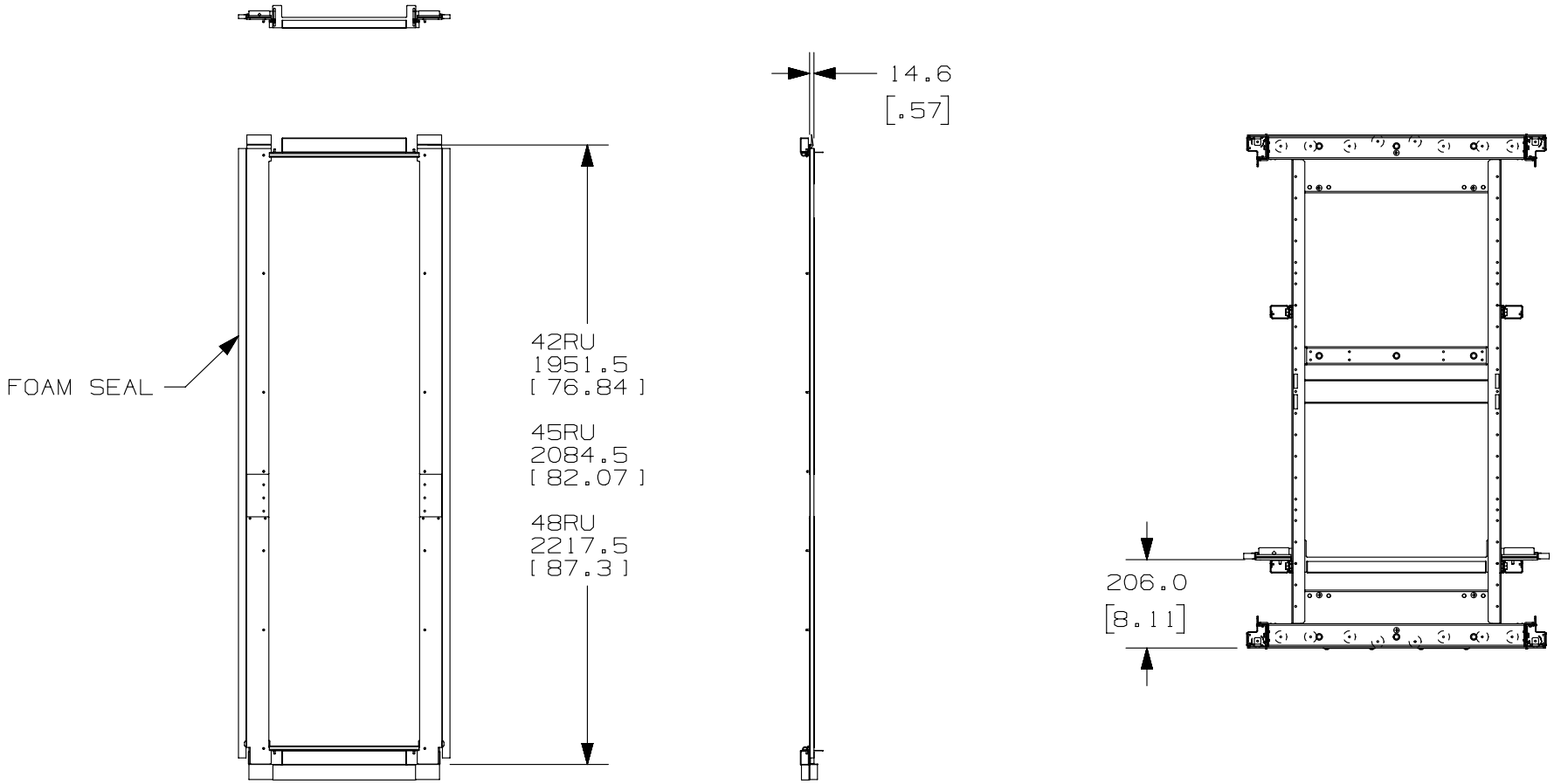


| REV | DATE | BY | CHK | APR | DESCRIPTION | ECN |
|---|---|---|---|---|---|---|
| 01A | 11-22-13 | PBS | ROJC | JDWE | SEE SHEET 1 OF 2 FOR REVISIONS | 13V379TU-DC |

TITLE

S7VBPN

CUSTOMER DRAWING

ITEM REVISION NAME: 13V379TU/01.PRT

DATASET FILE NAME: 13V379TU_DC/01A.PRT

UNLESS OTHERWISE SPECIFIED, DIMENSIONAL TOLERANCES ARE:

| INCHES | | METRIC - MILLIMETER | | ANGLE |
|---|---|---|---|---|
| X.X | +/- 0.03 | X. | +/- 0.8 | +/- 1° |
| X.XX | +/- 0.018 | X.X | +/- 0.46 | |
| X.XXX | +/- 0.007 | X.XX | +/- 0.18 | |

THIRD ANGLE PROJECTION

MATERIAL/COLOR: N/A

DRAWING NUMBER: 13V379TU-DC

| DRAWN BY | DATE | CHK | SCALE | SHT | SIZE |
|---|---|---|---|---|---|
| PBS | 11-22-13 | ROJC | NONE | SHT 2 OF 2 | A |