THIS COPY IS PROVIDED ON A RESTRICTED BASIS AND IS NOT TO BE USED IN ANY WAY DETRIMENTAL TO THE INTERESTS OF PANDUIT CORP.

NOTES:
1. DIMENSIONS IN [ ] ARE METRIC.
2. ALL MATERIALS AND COMPONENTS USED MEET THE MATERIAL RESTRICTIONS OF RoHS (EUROPEAN DIRECTIVE 2011/65/EU ON THE RESTRICTION OF HAZARDOUS SUBSTANCES) AS PROPOSED BY THE RoHS TECHNICAL ADAPTATION COMMITEE.
3. PART INCLUDES:
   - 1- ENCLOSURE BASE
   - 1- ENCLOSURE COVER
   - 1- LADDER RACK MOUNTING BRACKET
   - 1- FIELD INSTALLABLE KIT CONTAINING:
     - 4- ENCLOSURE BRACKET MOUNTING SCREWS
     - 2- LADDER RACK MOUNTING SCREWS
     - 2- D-RING
     - 1- FMS1 SPOOL WITH SCREW/NUT
     - 1- 24" LENGTH OF EDGE GROMMET
4. OPTICOM FIBER CASSETTE, COPPER PANEL AND JACKS ORDERED SEPARATELY

COVER REMOVED FOR CLARITY IN THIS VIEW

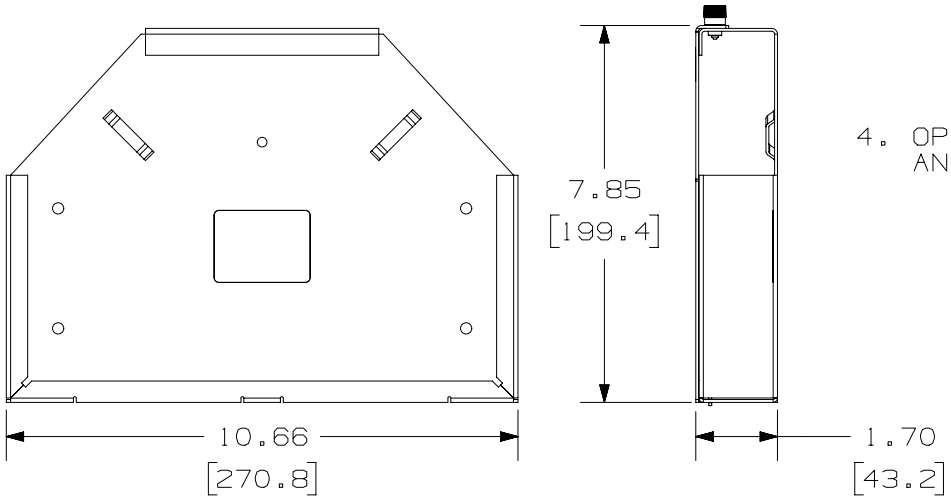

SCALE 1:4

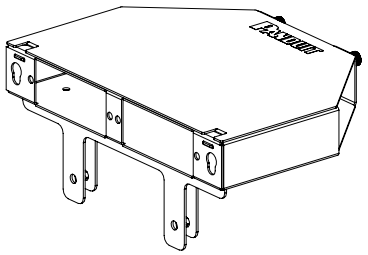

SCALE 1:6

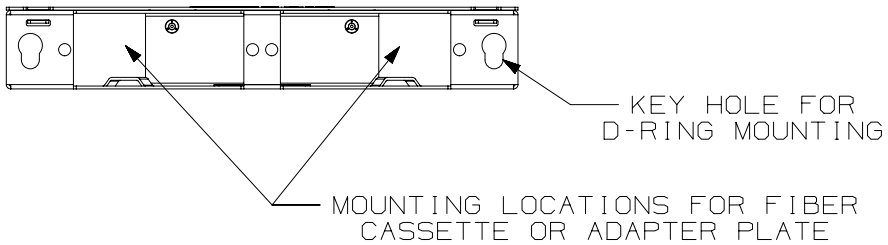

REV	DATE	BY	CHK	APR	DESCRIPTION	ECN
00A	03-26-18	SAT	JGD	AW	INITIAL RELEASE	F00902AA-DC

PART NUMBER: FLRME

TITLE: FIBER LADDER RACK MOUNT ENCLOSURE

CUSTOMER DRAWING

ITEM REVISION NAME: F00902AA/00

DATASET FILE NAME: F00902AA_DC/00A

THIRD ANGLE PROJECTION

MATERIAL: ENCLOSURE: ALUMINUM
MOUNTING BRKT: STEEL

DRAWING NUMBER: F00902AA-DC

DRAWN BY	DATE	CHK	SCALE	SHEET 1 OF 1	SIZE
JSP	12/19/17	JGD	NONE		A

A-SIZE CUSTOMER