FIBERRUNNER Verizon Motorola Video Expansion Bay Kit - FRVBMEKTYL

Panduit Part Numbers: H4X4YL6, HC4YL6, FTR4X4YL, WR4-C, FZBLP, TRC4HDBL, FHDEC4X4YL

© Panduit Corp. 2015

INSTALLATION INSTRUCTIONS

RW220

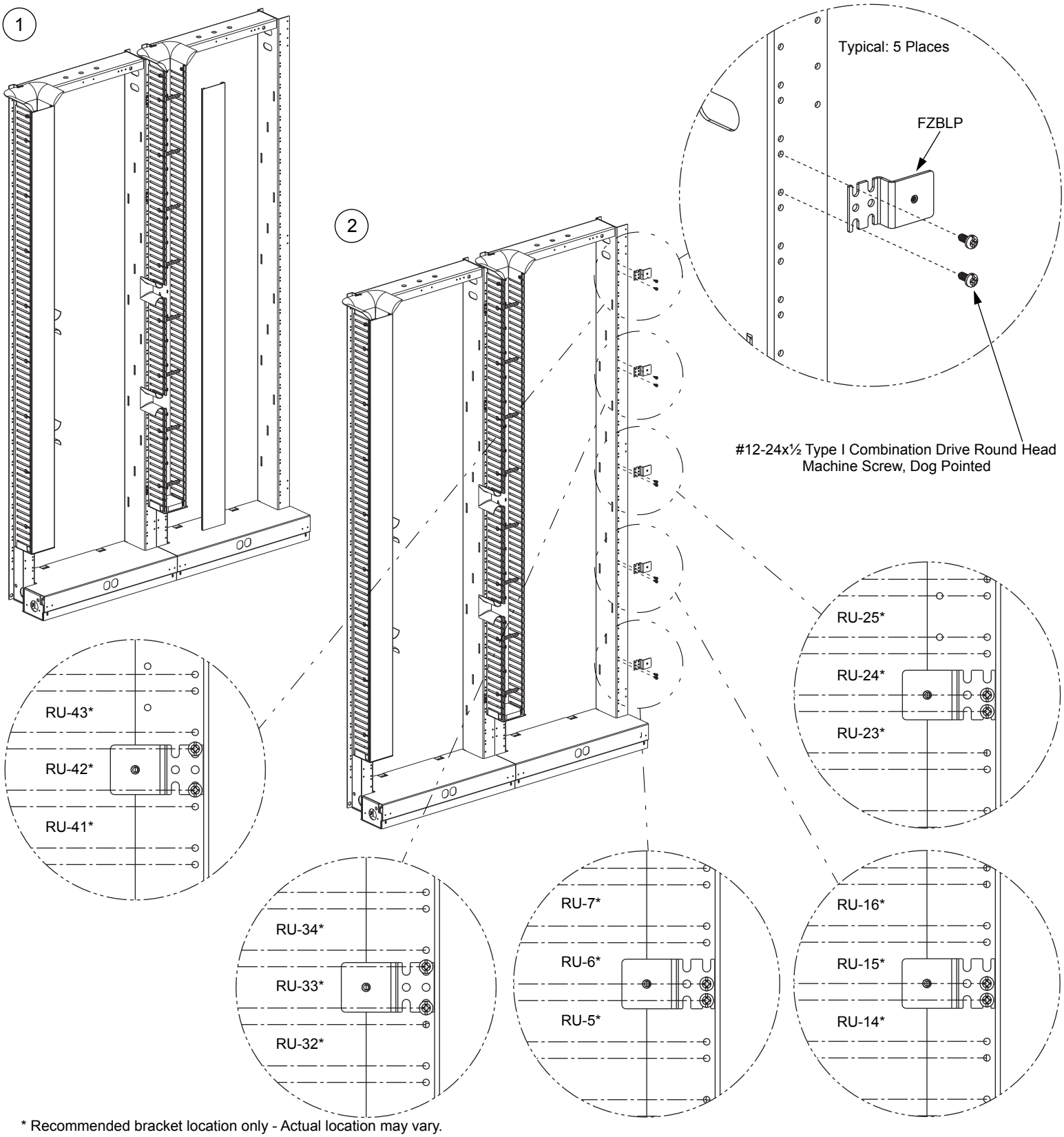

* Recommended bracket location only - Actual location may vary.

3

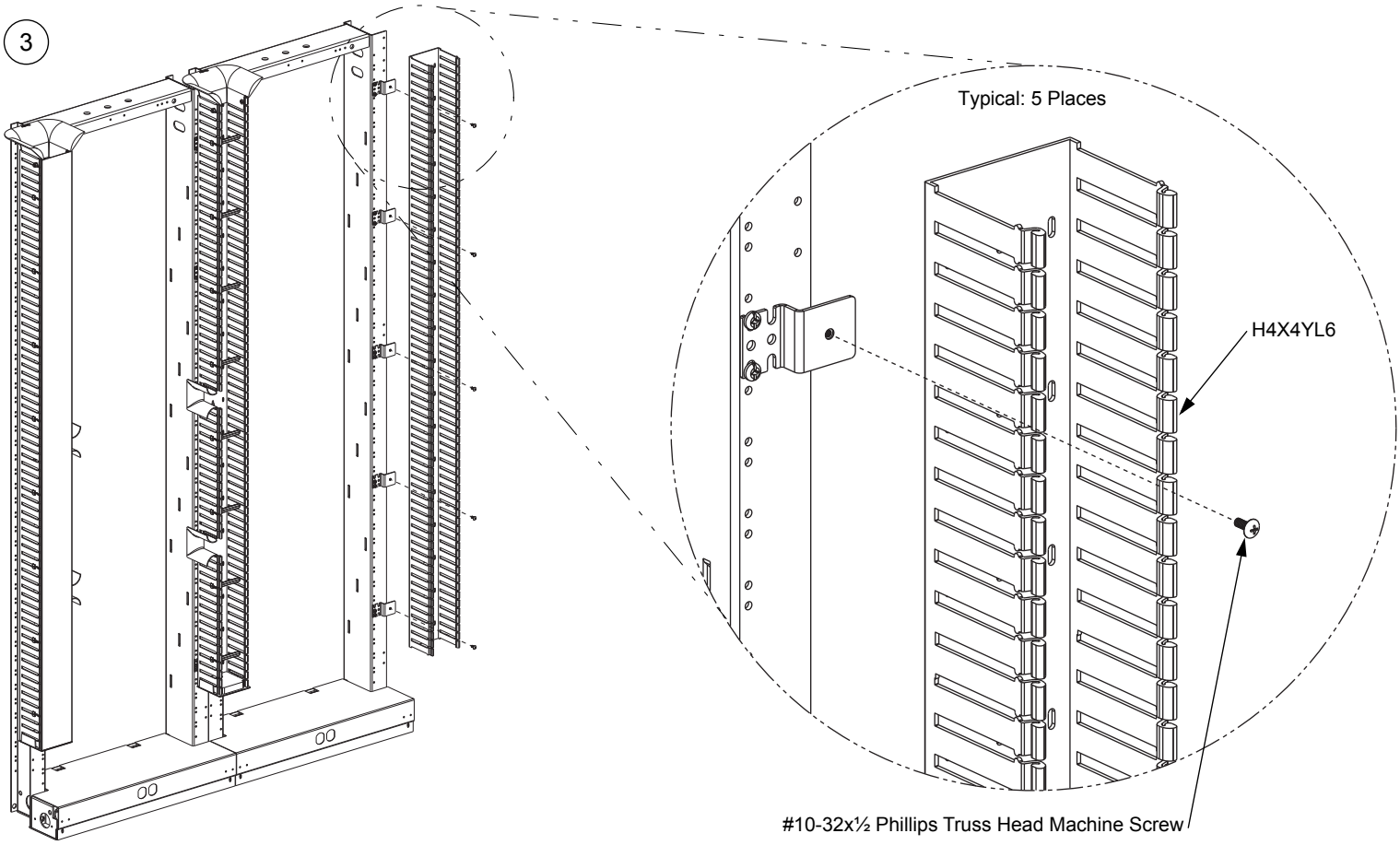

4

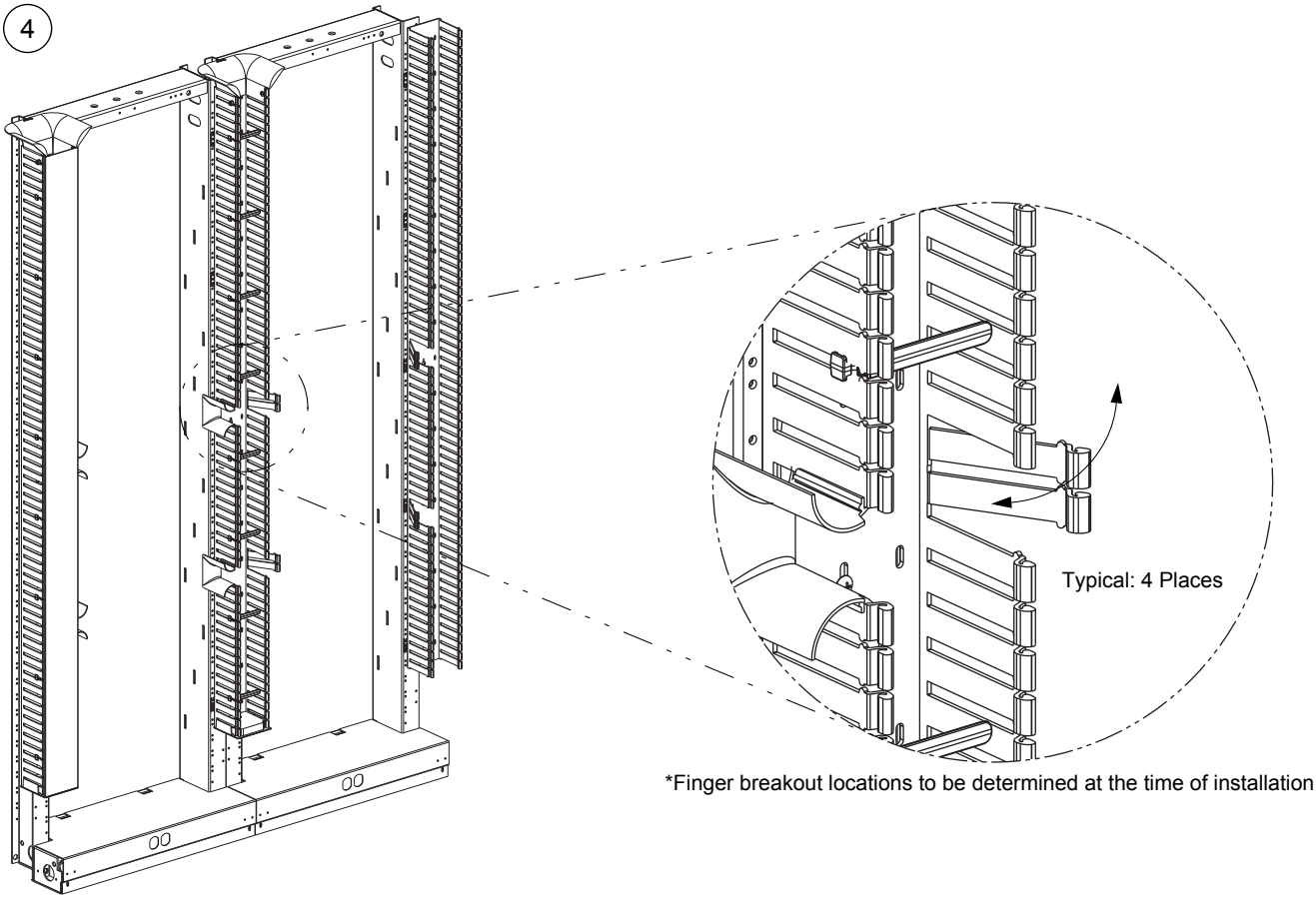

*Finger breakout locations to be determined at the time of installation

5

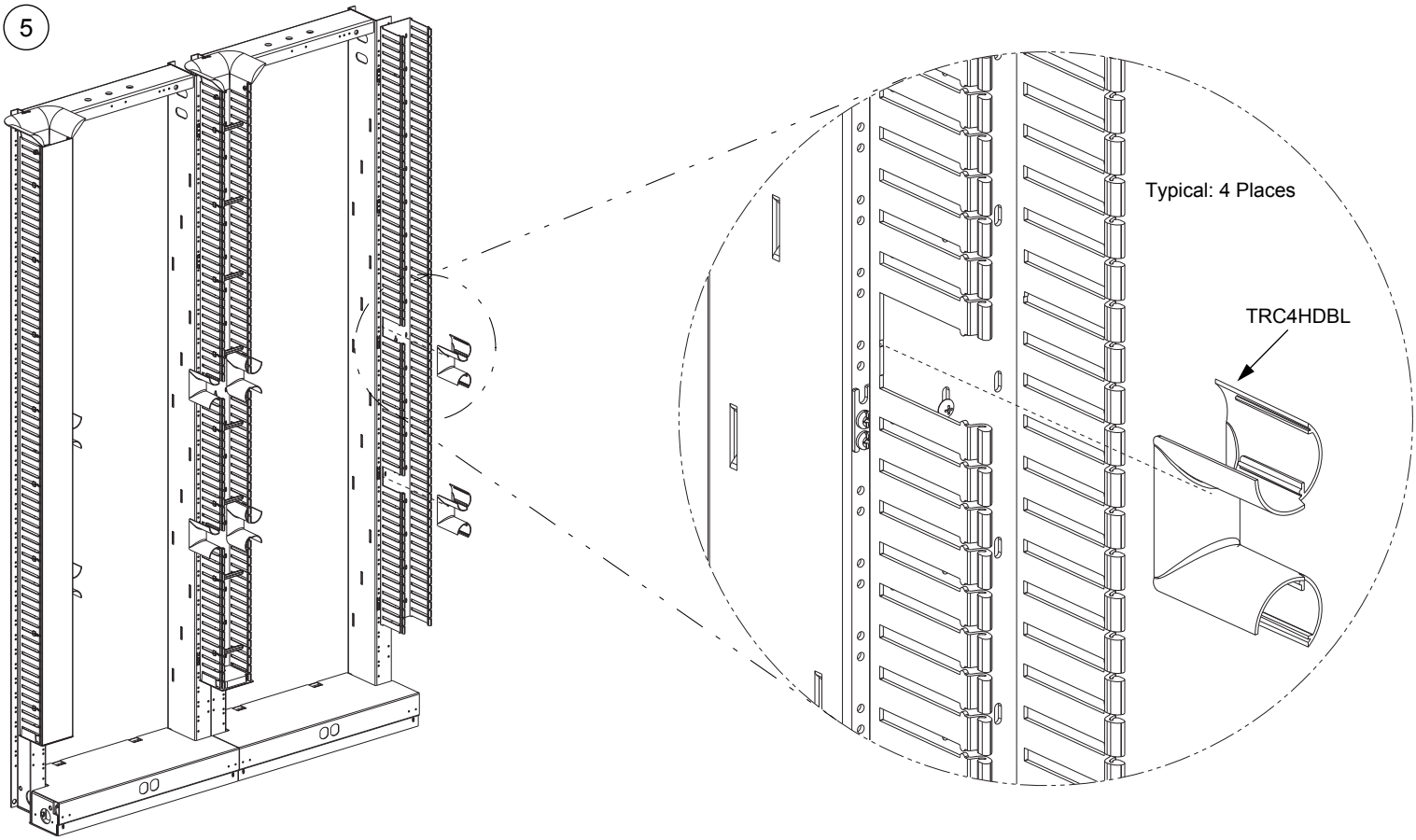

6

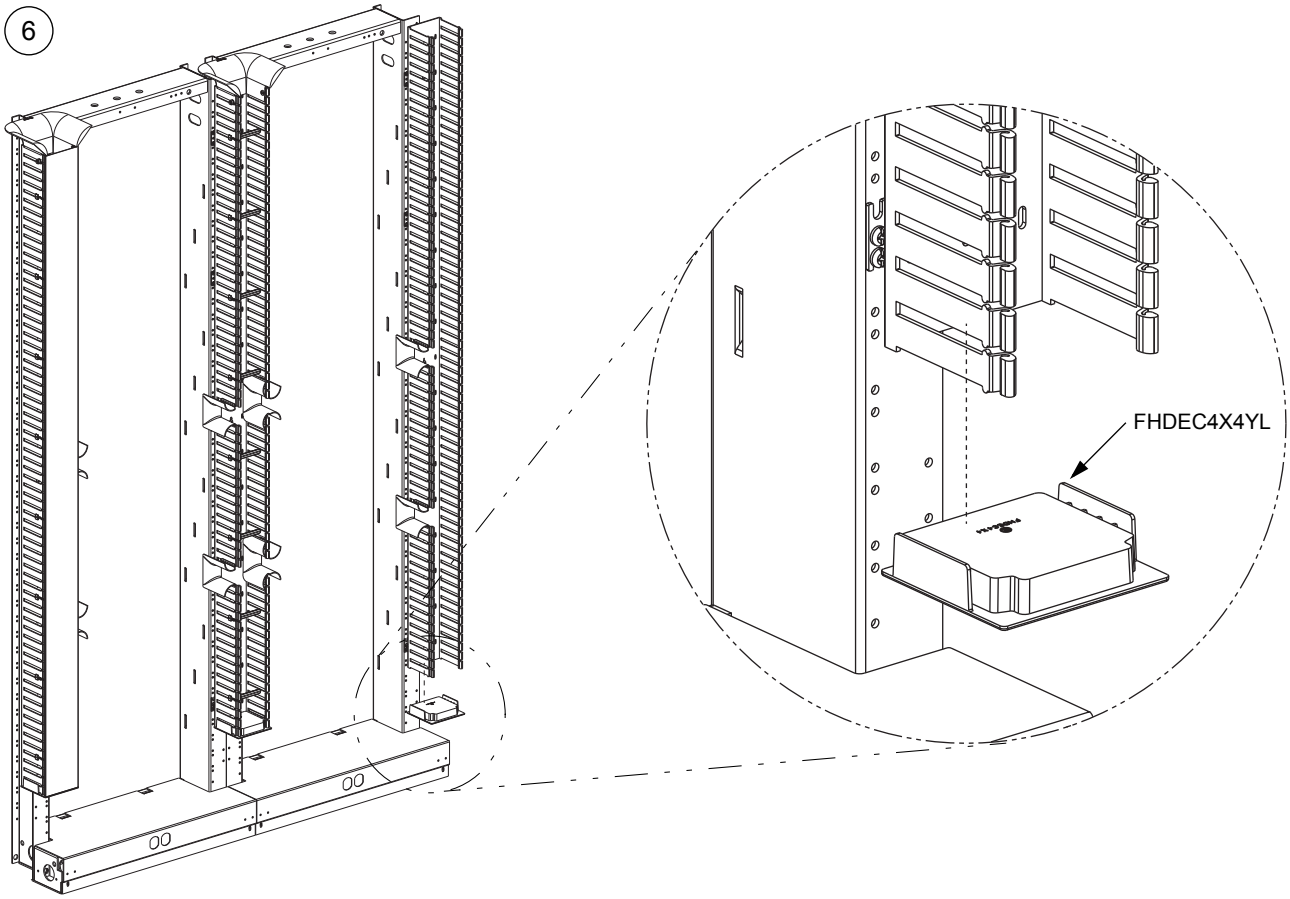

7

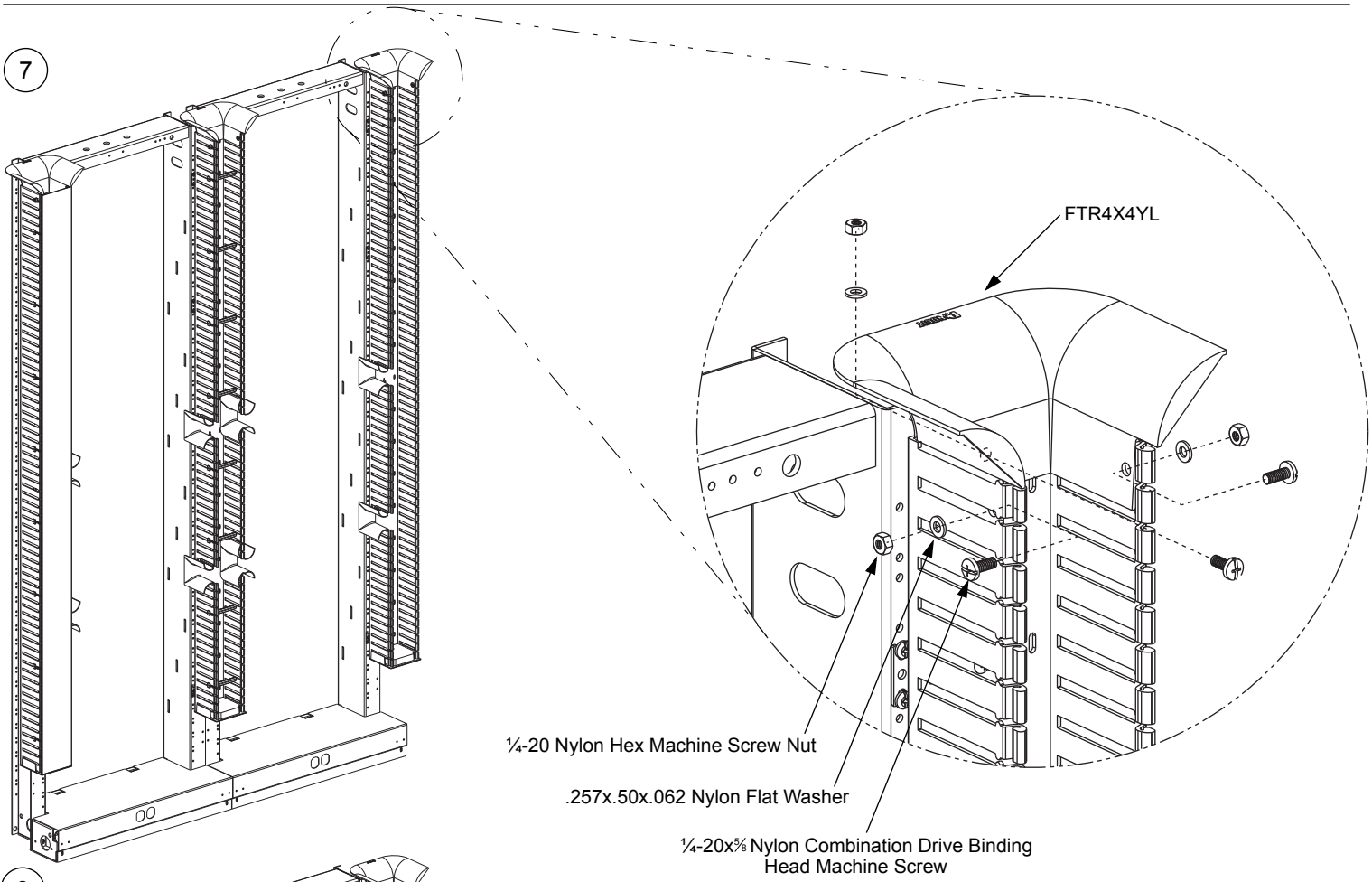

8

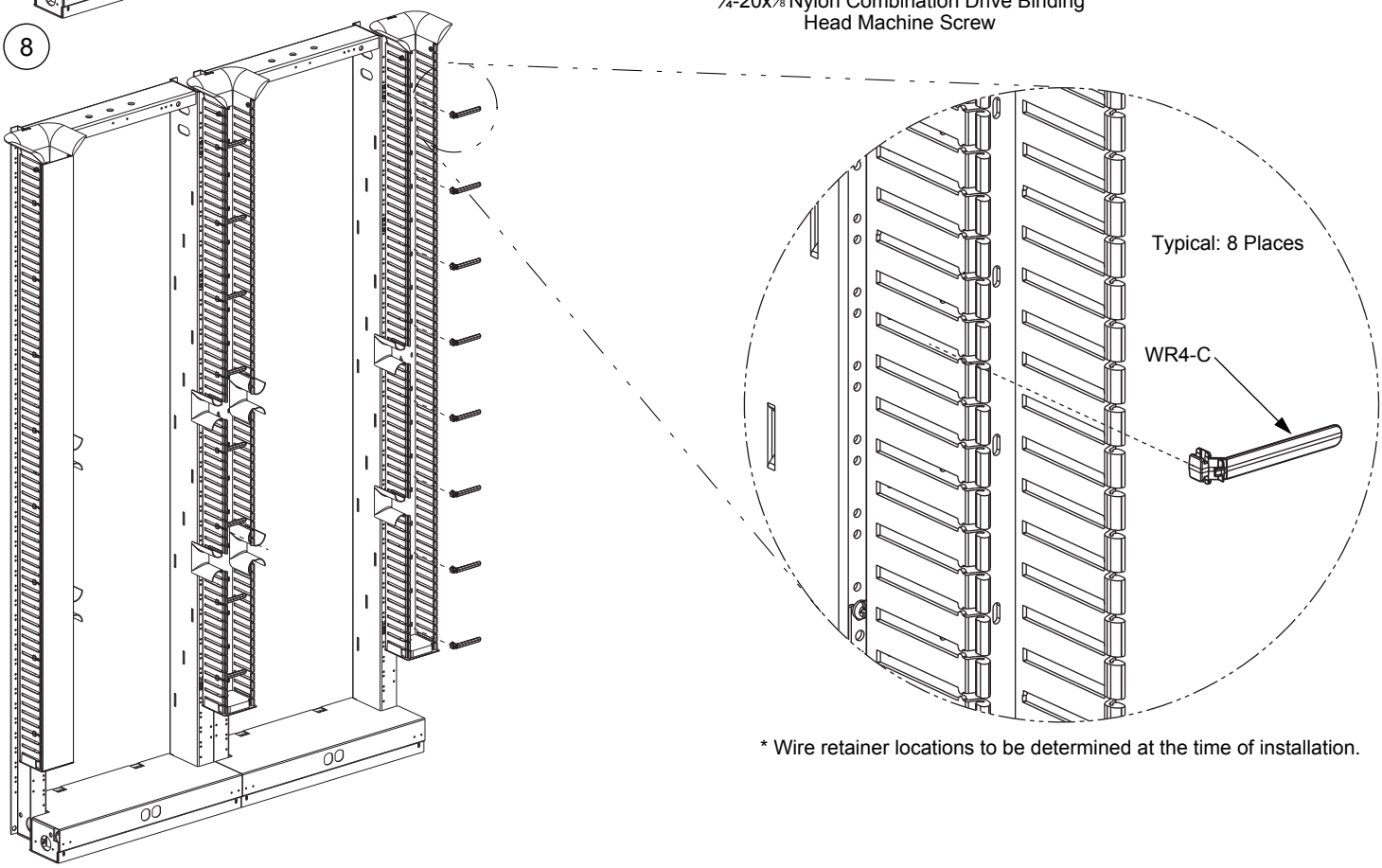

* Wire retainer locations to be determined at the time of installation.

9

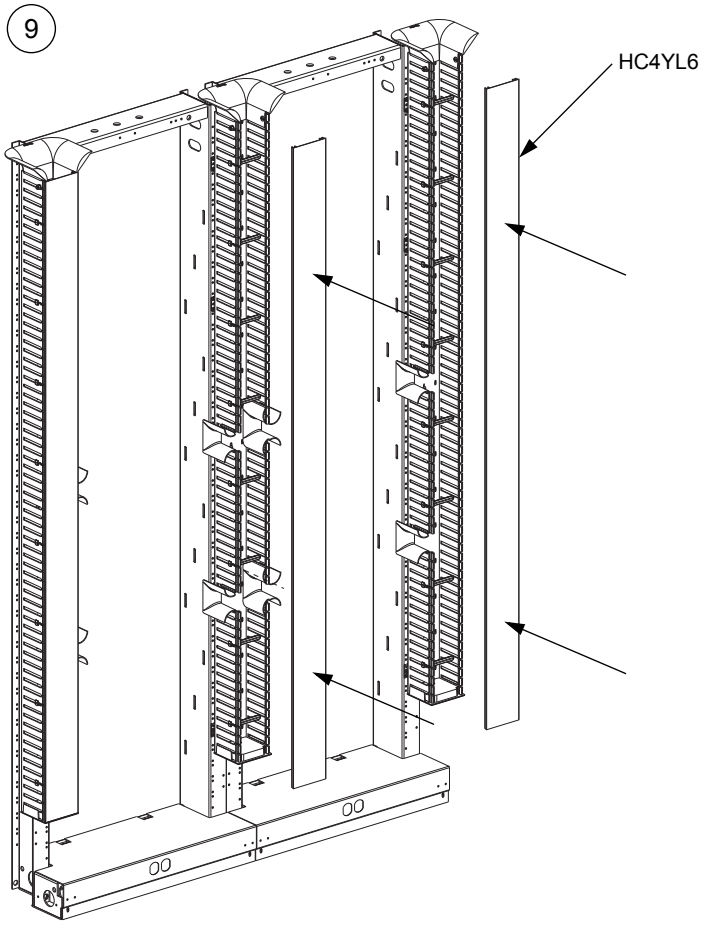
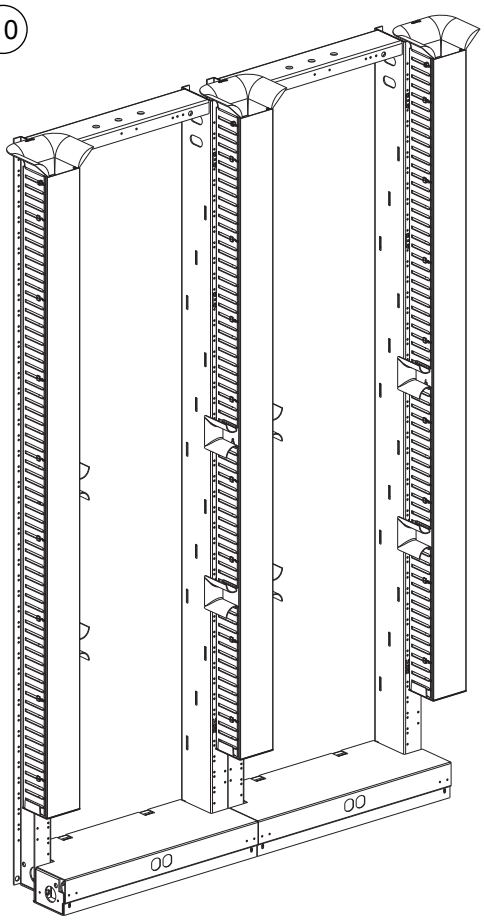
10