Part No: **MGN9028**

E-LIGHT BATTERY PACK 7.2V 4AH (STICK)
D NICD

CARACTÉRISTIQUES TECHNIQUES / **TECHNICAL SPECIFICATIONS**

MARQUE DES CELLULES	**CELL BRAND**	NX
TECHNOLOGIE	**TECHNOLOGY**	NI-CD
TENSION NOMINALE	**NOMINAL VOLTAGE**	7.2V
CAPACITÉ NOMINALE	**NOMINAL CAPACITY**	4000mAh at 0.2C
CHARGE STANDARD	**STANDARD CHARGE**	400mA ×15 hours
CHARGE LENTE	**TRICKLE CHARGE**	120~250mA
DÉCHARGE STANDARD	**STANDARD DISCHARGE**	800mA to 6.0V
DÉCHARGE DE COUPURE DE TENSION	**DISCHARGE CUT-OFF VOLTAGE**	6.0V
RÉSISTANCE INTERNE (À 1KHZ)	**INTERNAL RESISTENCE (AT 1KHZ)**	≤15mΩ
TEMPÉRATURE D'UTILISATION	**OPERATING TEMPERATURE**	55°c
TEMPÉRATURE DE STOCKAGE	**STORAGE TEMPERATURE**	-20~+30°C (6 months)
DURÉE DE VIE	**CYCLE LIFE**	AT 80% DOD (0.5C) 500 cycles

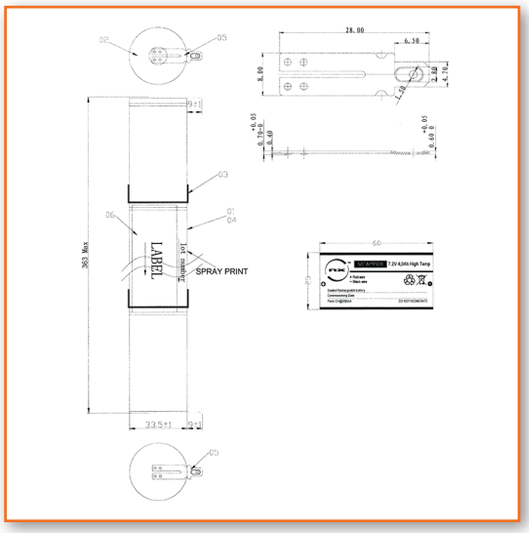

FR :
- Capacité à s'éclairer sur une durée d'1h ou 3h lors du déclenchement de l'éclairage de secours
- Capacité à se recharger en 24h pour supporter un nouveau déclenchement de l'éclairage de secours
- Capacité à se déclencher même après 4 ans de mise en service
- Peut fonctionner à une température ambiante de 55°c
- Fournit un courant continu de C/30 jusqu'à C/16 à 55°C

UK :
- **Capacity to charge the inverter with battery to meet either one-hour or three-hour standby duration**
- **Ability to recharge in 24 hours to support another standby duration**
- **Ability to renew the stand byduration after being in service for up to four years**
- **Work in ambient temperature at 55°C**
- **Delivers continuous trickle charge at C/30 to C/16 at 55°C**

ACCESSOIRES NON FOURNIS / **ACCESSORIES NOT INCLUDED**

XXX9081	Support de fixation pour pack taille D (lot de 2)	**End caps for D size (pack of 2 pcs)**
XXX9082	Faston 4.8mm femelle + fils (130cm : rouge + noir)	**Faston 4.8mm female + wires (red + black)**
XXX9083	Faston 4.8mm femelle + fils (130cm : rouge + noir) + connecteur AMP	**Faston 4.8mm female + wires (red + black) + AMP plug**

CARACTÉRISTIQUES MÉCANIQUES / **MECHANICAL CHARACTERISTICS**

DIMENSIONS H x Ø (MM)	**DIMENSIONS H xØ (MM)**	363 x 33.5
POIDS	**WEIGHT (G.)**	712 gr (+/- 1)
PROTECTION MÉCANIQUE	**COVERING**	Gaine thermo-rétractable /shrink sleeve
TERMINAISON (CONNECTEUR)	**OUTPUT (CONNECTOR)**	Faston 4.8mm

DESCRIPTION DU PRODUIT / **PRODUCT DESCRIPTION**

FR : Nos packs NX sont composés de cellules NICD haute température spécialement conçues pour répondre aux cahiers des charges des blocs d'éclairage de secours des plus grands fabricants. Dotée de la technologie Haute température ainsi que de séparateurs spécifiques, chaque cellules ont été optimisées pour fonctionner dans un environnement intensif à haute température. Ces composants permettent d'assurer et maintenir une charge permanente à haute température.

UK: Our NX packs are built using high temperature NiCd cells. These cells are specially designed to meet the technical specifications of the emergency lighting units built by the biggest manufacturers. Each cell is equipped with high temperature technology and special separators and has been optimized to function in an intensive environment at high temperatures. These components help to ensure and maintain a constant charge at high temperatures.

OUTLINESAFETYWARNING:USEONLYWITHINTHEALLOWEDPARAMETERS.Donotshortcircuitorover-loadthebattery.Chargeonlyusinganapprovedchargerdesignedspecificallytochargethisbattery.Donotheatabovemaximumtemperaturesindicated.Nevercrush,mutilate,punctureorabusethebattery. Do not dismantle the pack or disable any of the protective devices or circuits. DO NOT USE THE BATTERY IF YOU SUSPECT IT MAY BE FAULTY OR DAMAGED.

© Copyright Enix Energies 2005. NB: This document and the product design are the intellectual property of Enix Energies. No document or design may be copied or used for commercial purposes without written permission of Enix Energies. Users must satisfy themselves, by means of testing etc, that products are suitable for their application. Data in this document is for general guidance only; consult cell manufacturers data for definitive information. Information is given free of charge and in good faith, but no responsibility can be accepted for any errors or omission or costs or losses or liabilities arising from the use of this information. All business is conducted to Enix Energies terms and conditions only.

Part No: **MGN9028**

PERFORMANCES / PERFORMANCES

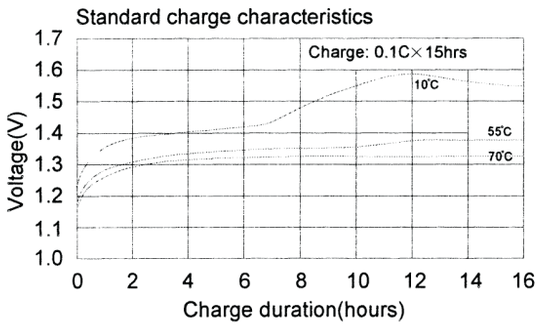

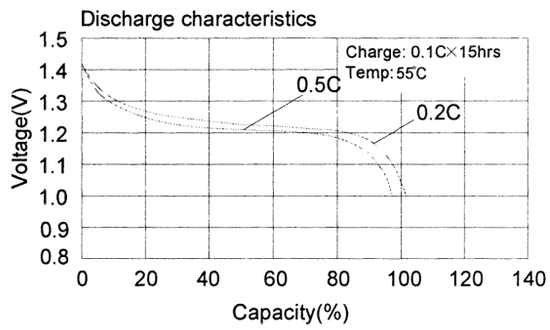

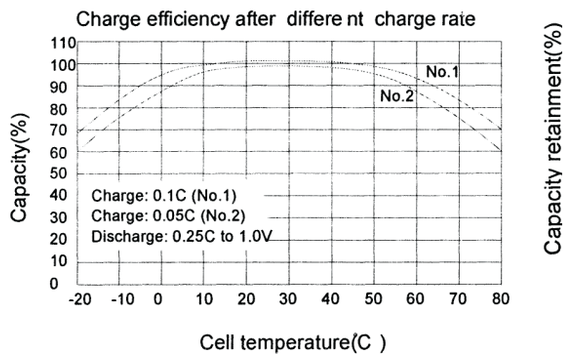

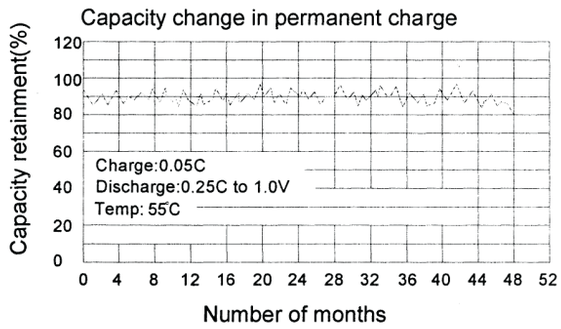

OUTLINESAFETYWARNING:USEONLYWITHINTHEALLOWEDPARAMETERS.Donotshortcircuitorover-loadthebattery.Chargeonlyusingan approvedchargerdesignedspecificallytochargethisbattery.Donotheatabovemaximumtemperaturesindicated.Nevercrush,mutilate,punctureorabusethebattery. Do not dismantle the pack or disable any of the protective devices or circuits. DO NOT USE THE BATTERY IF YOU SUSPECT IT MAY BE FAULTY OR DAMAGED.

© Copyright Enix Energies 2005. NB: This document and the product design are the intellectual property of Enix Energies. No document or design may be copied or used for commercial purposes without written permission of Enix Energies. Users must satisfy themselves, by means of testing etc, that products are suitable for their application. Data in this document is for general guidance only; consult cell manufacturers data for definitive information. Information is given free of charge and in good faith, but no responsibility can be accepted for any errors or omission or costs or losses or liabilities arising from the use of this information. All business is conducted to Enix Energies terms and conditions only.