THIS COPY IS PROVIDED ON A RESTRICTED BASIS AND IS NOT TO BE USED IN ANY WAY DETRIMENTAL TO THE INTERESTS OF PANDUIT CORP.

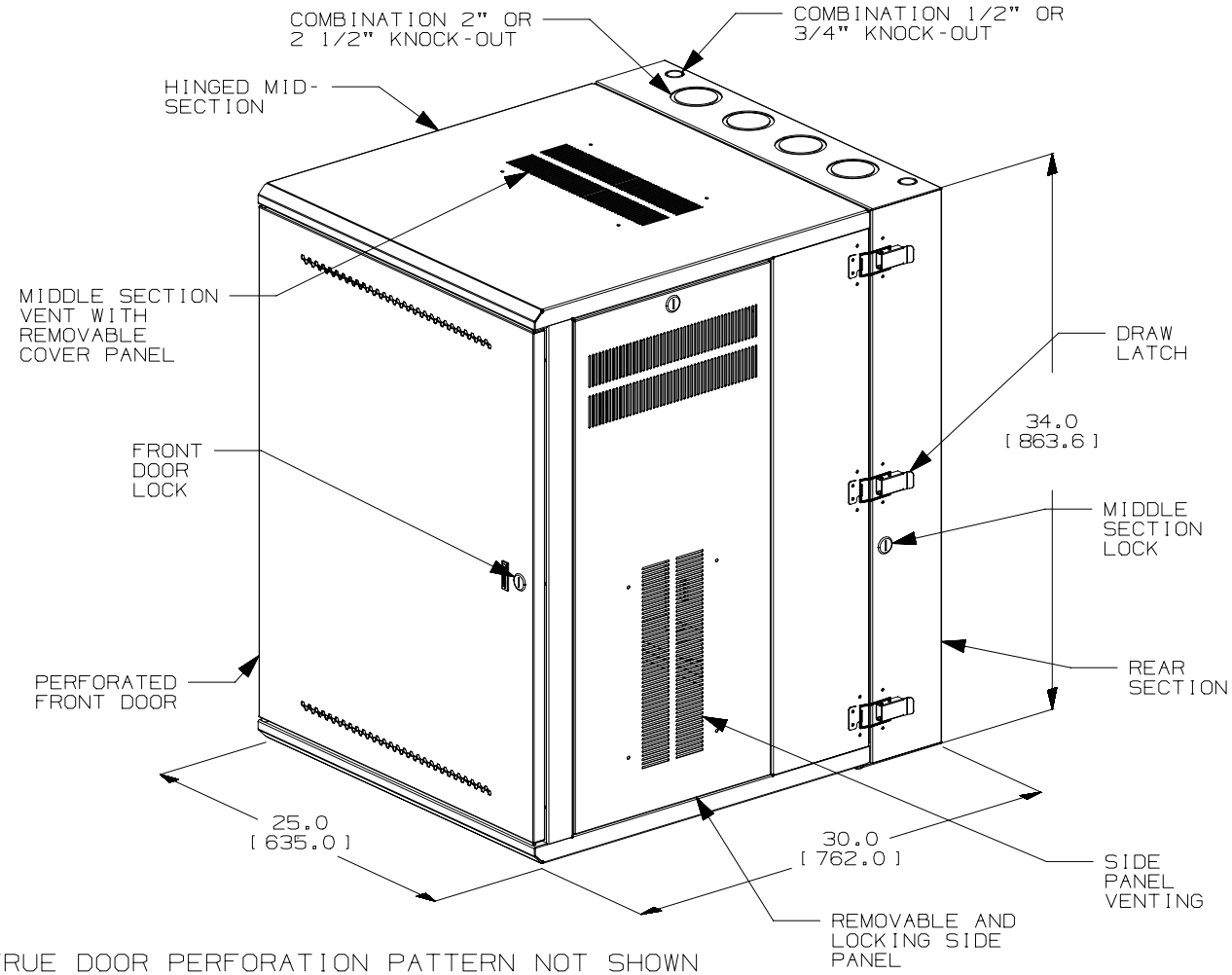

TRUE DOOR PERFORATION PATTERN NOT SHOWN

PANDUIT PART NO.	WEIGHT
PZWMC1830P	131 LBS/EACH 59.4 kg/EACH

NOTES:

1. VISIT OUR ON-LINE CATALOG AT WWW.PANDUIT.COM FOR A LIST OF CURRENT PARTS APPLICABLE FOR USE WITH THIS PRODUCT.
2. DIMENSIONS IN PARENTHESES ARE METRIC (mm).
3. CAN BE USED WITH ANY 19" EIA STANDARD COMPONENT UP TO 25" DEEP WITH ROOM FOR PATCH CORDS OR 26.8" DEEP WITH THE RAILS IN FORWARD MOST POSITION.
4. 18 AVAILBLE RACK SPACES.
5. VERTICAL EQUIPMENT MOUNTING ANGLES ARE ADJUSTABLE FRONT TO REAR OF CABINET IN .9" INCREMENTS.
6. LOAD CAPACITY, 300-LBS.
7. INSTALLS IN EITHER A HINGED RIGHT OR HINGED LEFT APPLICATION.
8. FRONT ACCESS THROUGH DOOR; REAR ACCESS THROUGH HINGED MID-SECTION.
9. PARTS SUPPLIED: (12) - #12-24 SCREWS
   (1) - ROLL OF TAK-TY
   (3) - SETS OF KEYS
   (1) - SPARE DOOR HINGE SPACER

REV	DATE	BY	CHK	APR	DESCRIPTION	ECN
00A	9-27-18	TWV	KZU	JEFK	RELEASED TO PRODUCTION	00198EAF-DC

TITLE

PANZONE 18RU, 30" DEEP HINGED WALL MOUNT CABINET (PZWMC1830P) PERFORATED DOOR

CUSTOMER DRAWING

ITEM REVISION NAME: 00198EAF/00.PRT

DATASET FILE NAME: 00198EAF_DC/00A.PRT

UNLESS OTHERWISE SPECIFIED, DIMENSIONAL TOLERANCES ARE: IN [mm]

THIRD ANGLE PROJECTION

MATERIAL: STEEL

DRAWING NUMBER: 00198EAF-DC

DRAWN BY	DATE	CHK	SCALE		SIZE
TWV	9-27-18	KZU	NONE	SHT 1 OF 2	A

THIS COPY IS PROVIDED ON A RESTRICTED BASIS AND IS NOT TO BE USED IN ANY WAY DETRIMENTAL TO THE INTERESTS OF PANDUIT CORP.

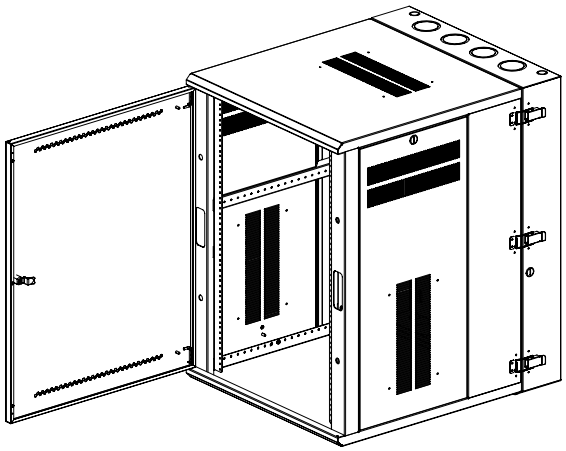

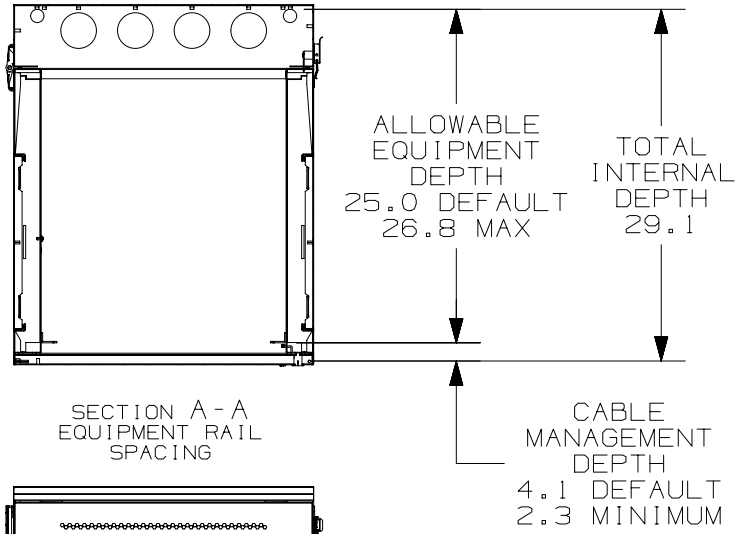

SECTION A-A
EQUIPMENT RAIL
SPACING

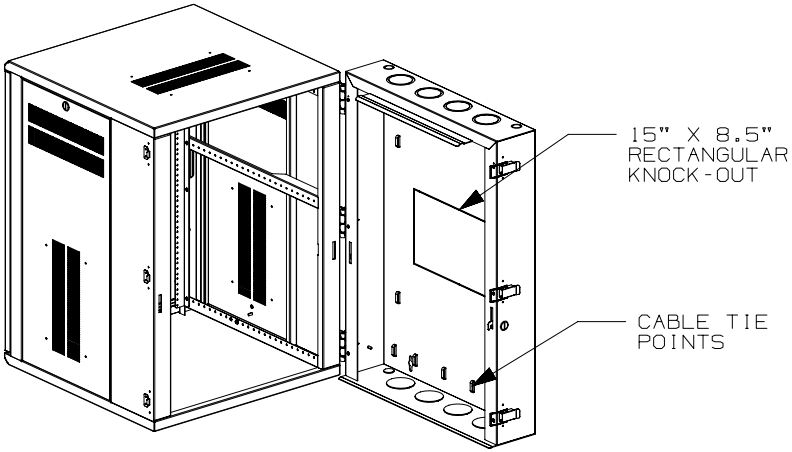

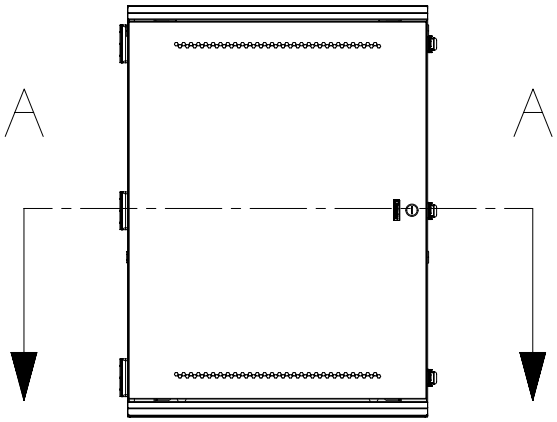

FRONT VIEW

REV	DATE	BY	CHK	APR	DESCRIPTION	ECN
00A	9-27-18	TWV	KZU	JEFK	SEE SHEET ONE FOR REVISIONS	00198EAF-DC

TITLE
PANZONE 18RU, 30" DEEP HINGED WALL MOUNT CABINET (PZWMC1830P) PERFORATED DOOR

CUSTOMER DRAWING

ITEM REVISION NAME
00198EAF/00.PRT

DATASET FILE NAME
00198EAF_DC/00A.PRT

UNLESS OTHERWISE SPECIFIED, DIMENSIONAL TOLERANCES ARE: IN [mm]

THIRD ANGLE PROJECTION

MATERIAL:
STEEL

DRAWING NUMBER:
00198EAF-DC

DRAWN BY	DATE	CHK	SCALE		SIZE
TWV	9-27-18	KZU	NONE	SHT 2 OF 2	A