THIS COPY IS PROVIDED ON A RESTRICTED BASIS AND IS NOT TO BE USED IN ANY WAY DETRIMENTAL TO THE INTERESTS OF PANDUIT CORP.

PANDUIT PART NUMBER	STUD SIZE	DIMENSIONS - in.					CA9 SERIES CRIMP DIE	CA-800(EZ) SERIES CRIMP DIE
		A ± .03	W ± .01	C ± .02	M ± .03	H ±.01		
PV14-6LFB-3K	#6	.85 (21.59)	.25 (6.35)	.18 (4.57)	.63 (16.00)	.14 (3.56)	CD9-2A	CD-800-2
PV14-6LFWB-3K	#6	.85 (21.59)	.29 (7.37)	.18 (4.57)	.63 (16.00)	.14 (3.56)		
PV14-8LFB-3K	#8	.92 (23.37)	.29 (7.37)	.23 (5.84)	.68 (17.27)	.16 (4.06)		
PV14-10LFB-3K	#10	.92 (23.37)	.33 (8.38)	.23 (5.84)	.68 (17.27)	.19 (4.83)		
PV14-10LFNB-3K	#10	.92 (23.37)	.28 (7.11)	.23 (5.84)	.68 (17.27)	.19 (4.83)		

PRESS/APPLICATOR COMPATIBILITY CHART

PRESS	CP-871	CP-861
APPLICATOR	CA9 CA-800EZ	CA-800

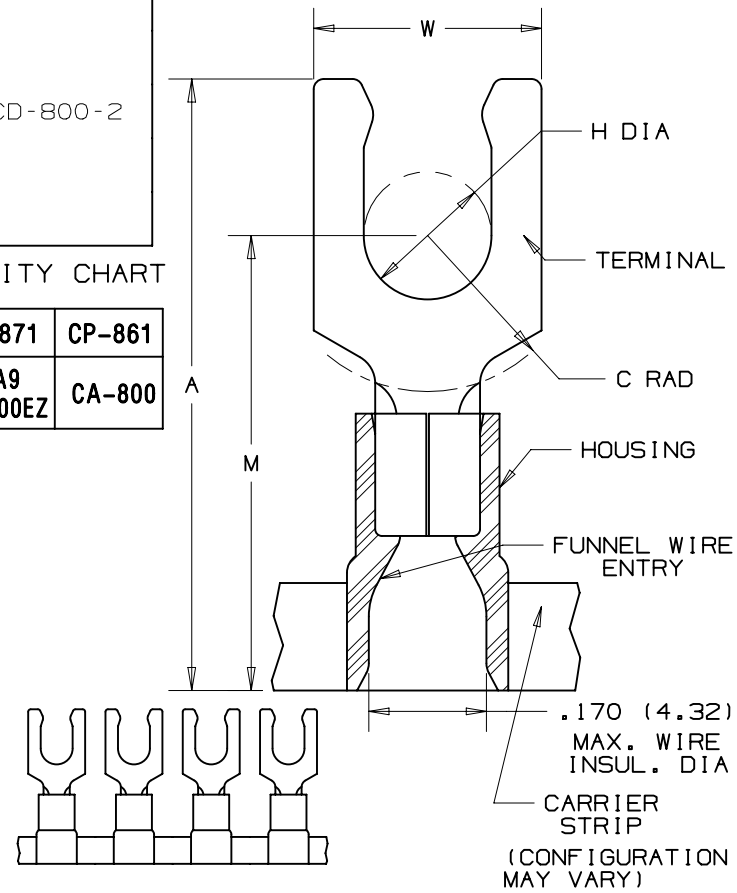

NOTES:

1. cULus LISTED FOR:
   A. 600V MAX VOLTAGE RATING
   B. 221° F (105° C) MAX TEMP RATING
   C. #16-14 AWG [1.5-2.5 mm²) SOLID OR STRANDED COPPER WIRE
2. SEE WWW.PANDUIT.COM FOR PACKAGE QUANTITIES
3. MATERIAL:
   A. STAMPING - .03" THK, COPPER TIN PLATED
   B. HOUSING - VINYL, BLUE
4. DIMENSIONS IN BRACKETS ARE IN MILLIMETERS
5. WIRE STRIP LENGTH: 1/4 + 1/32 (6.4 + .8) - 0 - 0

LISTED 587H E52164

CERTIFIED LR31212

REV	DATE	BY	CHK	APR	DESCRIPTION	ECN
05	09/14	JHNU	JHNU	RGB	ADDED CSA LOGO REVISED PART NUMBERS: PV14 WAS PV18	N41071BA-A41071
04	07/14	MBY	JHNU	RGB	REVISED NOTES, MOVED TOOLS TO TABLE, REVISED CERTIFICATION, UPDATED BORDER	N41071BA-A41071

TITLE

LOCKING FORKS 2 PC. VINYL INSULATED, #16-14 BARREL, CONTINUOUS REEL

CUSTOMER DRAWING

ITEM REVISION NAME: N41071BA/05

DATASET FILE NAME: N41071BA/05

UNLESS OTHERWISE SPECIFIED, DIMENSIONAL TOLERANCES ARE: IN [mm]

.X ± .XXX ±

.XX ± ANGLES ±

THIRD ANGLE PROJECTION

MATERIAL: SEE NOTES

DRAWING NUMBER: A41071

DRAWN BY	DATE	CHK	SCALE	SHT 1 OF 1	SIZE
DSM		FS	NONE		A

D10100DA/16