THIS COPY IS PROVIDED ON A RESTRICTED BASIS AND IS NOT TO BE USED IN ANY WAY DETRIMENTAL TO THE INTERESTS OF PANDUIT CORP.

PANDUIT PART NO.	DIM "A"	DESCRIPTION	WEIGHT
SN8FBB	421mm-522mm/542mm-745mm	FRONT TO BACK CABLE MANAGER	5.0 LBS/EACH 2.3 Kg/EACH

NOTES:
1. VISIT OUR ON-LINE CATALOG AT WWW.PANDUIT.COM FOR A LIST OF CURRENT PARTS APPLICABLE FOR USE WITH THIS PRODUCT.
2. PRIMARY DIMENSIONS ARE IN MILLIMETERS (mm).
3. PARTS SUPPLIED:
   (1)- FRONT TO BACK CABLE MANAGER
   (1)- HARDWARE KIT
   (1)- INSTRUCTION SHEET
4. COLOR: BLACK

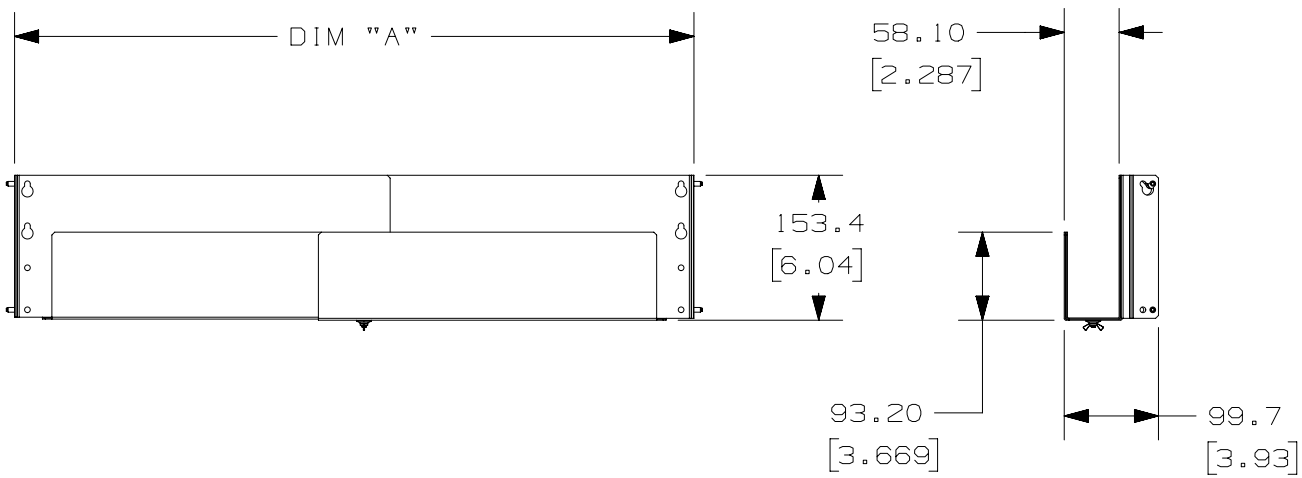

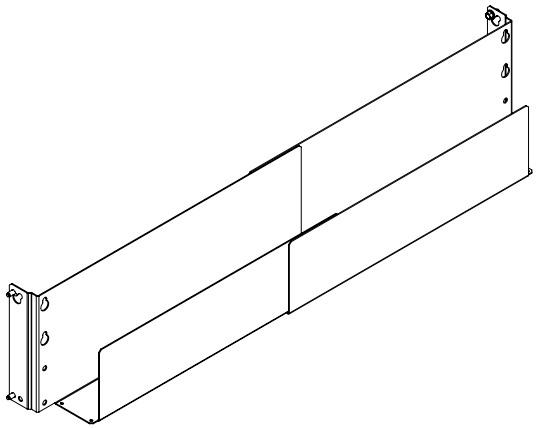

REV	DATE	BY	CHK	APR	DESCRIPTION	ECN
00A	8/30/17	MES			RELEASED TO PRODUCITON	V09001KL/02

TITLE

FRONT TO BACK CABLE MANAGER

CUSTOMER DRAWING

ITEM REVISION NAME: 00025EAJ/00

DATASET FILE NAME: 00025EAJ_DC/00A

MATERIAL: N/A

THIRD ANGLE PROJECTION

DRAWING NUMBER: 00025EAJ-DC

DRAWN BY	DATE	CHK	SCALE		SIZE
MES	8/30/17		NONE	SHT 1 OF 1	A

D10100DA/16