THIS COPY IS PROVIDED ON A RESTRICTED BASIS AND IS NOT TO BE USED IN ANY WAY DETRIMENTAL TO THE INTERESTS OF PANDUIT CORP.

PANDUIT P/N	WEIGHT
RTPSA-C	.264 LB/100 PCS (119.7 g/100 PCS)

NOTES:
1. MATERIAL: HOUSING - THERMOPLASTIC UL94V-0 RATED; CONTACT TERMINAL - PHOSPHOR BRONZE ELECTRO-POLISHED AND PLATED WITH .000050" MIN. GOLD IN MATING AREA, GOLD FLASH OVER REMAINDER, .000100" MIN. NICKEL UNDERPLATE.
2. PLUG ACCEPTS 4 PAIR CABLE .225-.250" DIA. WITH 24 AWG STRANDED CONDUCTOR WITH A MAXIMUM INSULATOR DIAMETER OF .040".
3. MEETS DIMENSIONAL REQUIREMENTS OF FCC PART 68 AND IEC 60603-7. ALL DIMENSIONS MAXIMUM UNLESS OTHERWISE SPECIFIED.
4. TERMINATED CONTACT HEIGHT DIMENSION: .237±.005".
5. SEE CURRENT CATALOG FOR ADDITIONAL PART NUMBER SUFFIXES TO INDICATE PACKAGE QUANTITY.
6. DIMENSIONS IN BRACKETS ARE METRIC.

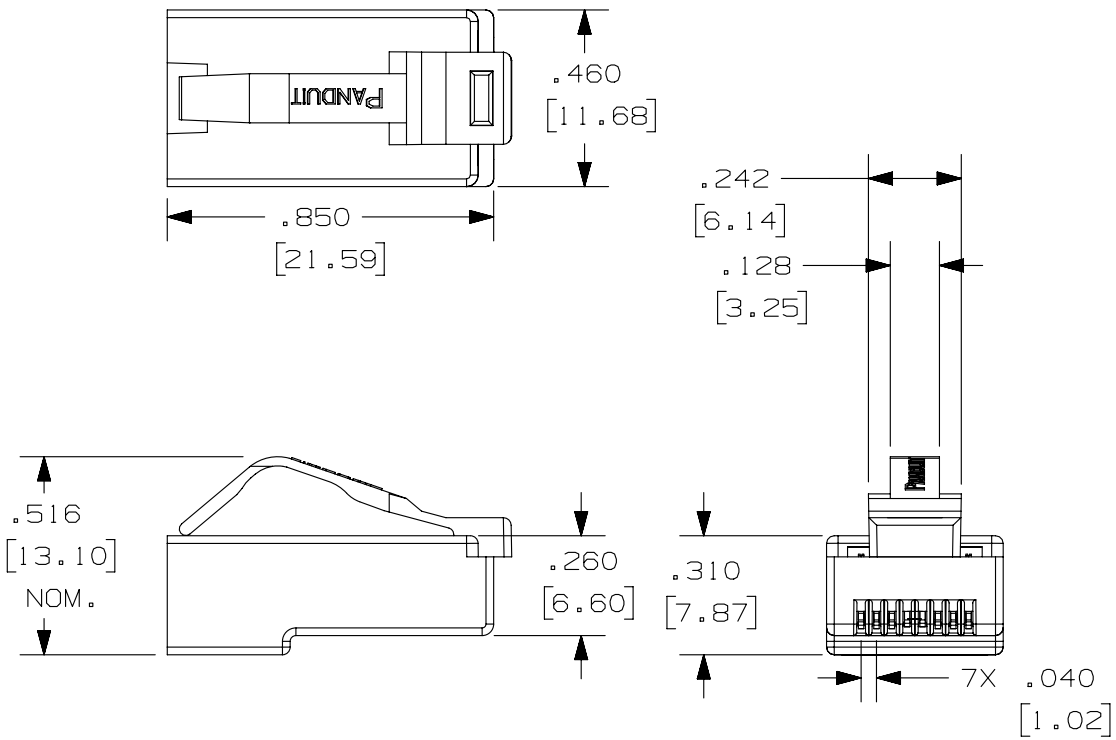

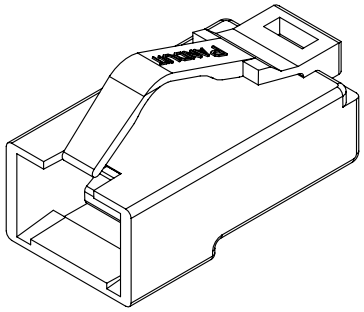

REV	DATE	BY	CHK	APR	DESCRIPTION	ECN
1	5-13-14	BJN	JSP	EJH	REVISED & REDRAWN PREVIOUS REVISIONS REMVD FOR CLARITY	01537-08

PART NUMBER: RTPSA-C

TITLE: TX6 PLUS PLUG HOUSING WITH CONTACTS

CUSTOMER DRAWING

ITEM REVISION NAME: M01537BH/02

DATASET FILE NAME: M01537BH_DC08/02A

UNLESS OTHERWISE SPECIFIED, DIMENSIONAL TOLERANCES ARE: IN [mm]
.X ± .XXX ± .010 [.3]
.XX ± .03[.8] ANGLES ±
THIRD ANGLE PROJECTION

MATERIAL: SEE NOTES

DRAWING NUMBER: 01537-08

DRAWN BY	DATE	CHK	SCALE	SIZE
LZ	11-10-04	CEF	2 TO 1	A

SHT 1 OF 1

D10100DA/14