THIS COPY IS PROVIDED ON A RESTRICTED BASIS AND IS NOT TO BE USED IN ANY WAY DETRIMENTAL TO THE INTERESTS OF PANDUIT CORP.

NOTES:
1. SEE CURRENT CATALOG FOR PART NUMBER SUFFIXES TO INDICATE COLOR AND/OR PACKAGE QUANTITIES.
2. SEE CATALOG FOR COMPLETE LIST OF PARTS APPLICABLE FOR USE WITH THIS PRODUCT.
3. PART NUMBERS:SEE SHEET 2
4. MATERIALS:
   A. BOX AND LID: PLASTIC
   B. ADAPTER: COMPOSITE PLASTIC
5. CASSETTE WEIGHT: 1.98oz [56g]
6. DIMENSIONS IN BRACKETS ARE METRIC.

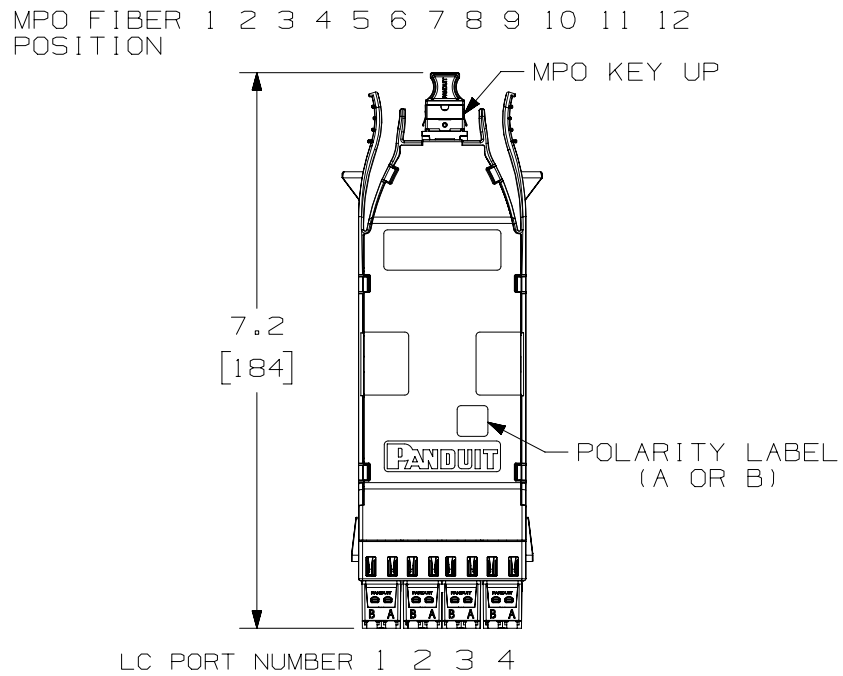

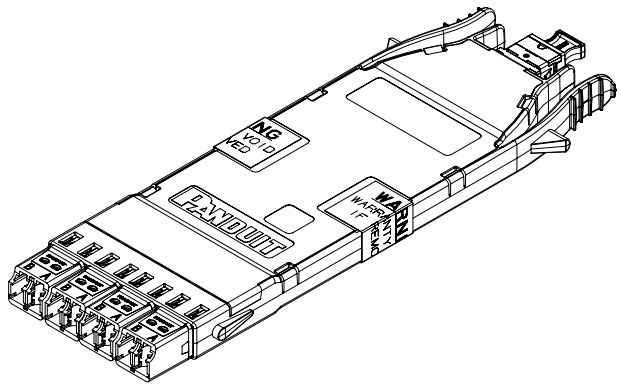

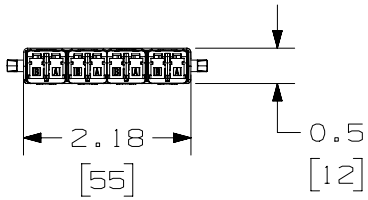

FRONT VIEW

4-1 BREAKOUT CASSETTE FIBER ROUTING (A CONNECTIVITY)								
LC PORT NUMBER	1B	1A	2B	2A	3B	3A	4B	4A
MPO FIBER POSITION	12	1	11	2	10	3	9	4

4-1 BREAKOUT CASSETTE FIBER ROUTING (B CONNECTIVITY)								
LC PORT #	1B	1A	2B	2A	3B	3A	4B	4A
MPO FIBER POSITION	1	12	2	11	3	10	4	9

REV	DATE	BY	CHK	APR	DESCRIPTION	ECN
00	01-05-17	SAT	JESA	EJH	RELEASED TO PRODUCTION	15F308AA-DC

TITLE
HD FLEX 4-PORT LC BREAKOUT CASSETTE
CUSTOMER DRAWING

ITEM REVISION NAME: 15F308AA/00
DATASET FILE NAME: 15F308AA_DC/00A
ALL DIMENSIONS ARE FOR REFERENCE
THIRD ANGLE PROJECTION
MATERIAL: SEE NOTES
DRAWING NUMBER: 15F308AA-DC

DRAWN BY	DATE	CHK	SCALE		SIZE
SAT	01-04-17	JESA	NONE	SHT 1 OF 2	A

THIS COPY IS PROVIDED ON A RESTRICTED BASIS AND IS NOT TO BE USED IN ANY WAY DETRIMENTAL TO THE INTERESTS OF PANDUIT CORP.

HD FLEX 4-PORT LC CONVERSION CASSETTE - METHOD B	
FHC3X0-08H-10B	8 FIBER / OM3 OPTIMIZED LOSS
FHC3Z0-08H-10B	8 FIBER / OM4 OPTIMIZED LOSS
FHC3ZA-08H-10B	8 FIBER / OM4 ULTRA LOW LOSS

HD FLEX 4-PORT LC CONVERSION CASSETTE - METHOD A	
FHC3X0-08H-10A	8 FIBER / OM3 OPTIMIZED LOSS
FHC3Z0-08H-10A	8 FIBER / OM4 OPTIMIZED LOSS
FHC3ZA-08H-10A	8 FIBER / OM4 ULTRA LOW LOSS
FHC39N-08H-10A	8 FIBER / OS2 STANDARD LOSS

REV	DATE	BY	CHK	APR	DESCRIPTION	ECN
00	01-05-17	SAT	JESA	EJH	RELEASED TO PRODUCTION	15F308AA-DC

TITLE

HD FLEX 4-PORT LC BREAKOUT CASSETTE

CUSTOMER DRAWING

ITEM REVISION NAME: 15F308AA/00

DATASET FILE NAME: 15F308AA_DC/00A

ALL DIMENSIONS ARE FOR REFERENCE

THIRD ANGLE PROJECTION

MATERIAL: SEE NOTES SHEET 1

DRAWING NUMBER: 15F308AA-DC

DRAWN BY	DATE	CHK	SCALE	SHT 2 OF 2	SIZE
SAT	01-04-17	JESA	NONE		A