THIS COPY IS PROVIDED ON A RESTRICTED BASIS AND IS NOT TO BE USED IN ANY WAY DETRIMENTAL TO THE INTERESTS OF PANDUIT CORP.

NOTES:
1. VISIT OUR ONLINE CATALOG AT WWW.PANDUIT.COM FOR A LIST OF CURRENT PARTS APPLICABLE WITH THIS PRODUCT.
2. DIMENSIONS IN PARENTHESES ARE ENGLISH (in).
3. LOCK FOR NET-VERSE (D-TYPE) CABINET CAN BE KEYED TO MATCH PART #NVDLOCK-xxx
4. PARTS SUPPLIED:
   (2) - SIDE PANEL LOCKS
   (4) - SIDE PANEL LOCK KEYS, W/2 KEY RINGS
   (1) - INSTALLATION INSTRUCTION (NOT SHOWN)

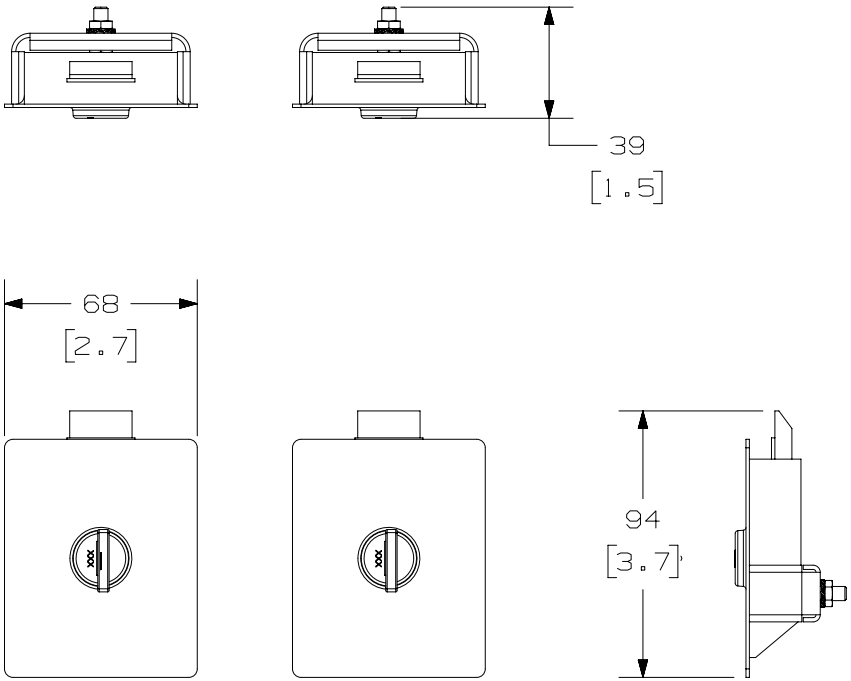

PANDUIT PART NO.	WEIGHT
NVSPLOCK-xxx	0.45 Kg (1.0 LBS)

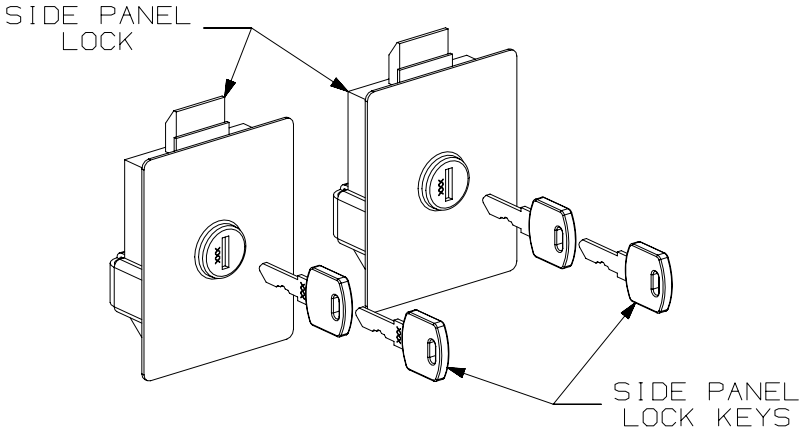

REV	DATE	BY	CHK	APR	DESCRIPTION	ECN
00A	6/1/18	MEX-JAGC	DWR	SJP	RELEASED TO PRODUCTION	V09001RP/00

TITLE: SIDE PANEL LOCK ACCESSORY

CUSTOMER DRAWING

ITEM REVISION NAME: 00199EAZ/00

DATASET FILE NAME: 00199EAZ_DC/00A

MATERIAL: N/A

THIRD ANGLE PROJECTION

DRAWING NUMBER: 00199EAZ-DC

DRAWN BY	DATE	CHK	SCALE		SIZE
MEX-JAGC	6/1/18	DWR	NONE	SHT 1 OF 1	A

D10100DA/20