NetKey

Network Components
Keystone Cabling System

NetKey Keystone Modular Patch Panels

Part Numbers: NKFP24Y, NKFP48Y, NKFPA24, NKFPA48

© Panduit Corp. 2017

INSTALLATION INSTRUCTIONS

NK314E

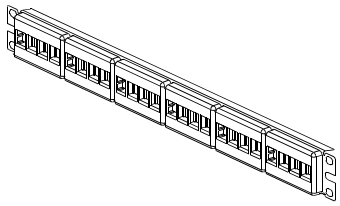

NKFP24Y

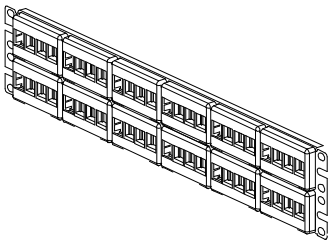

NKFP48Y

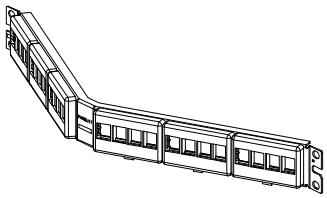

NKFPA24

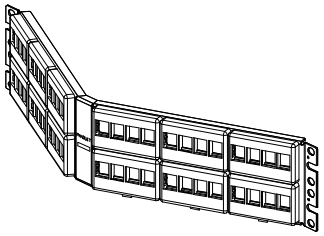

NKFPA48

Module Installation

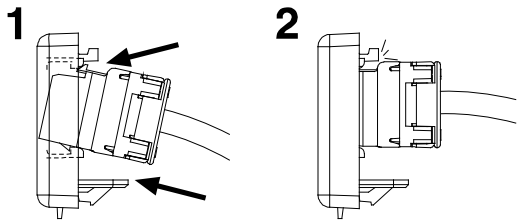

Module Removal

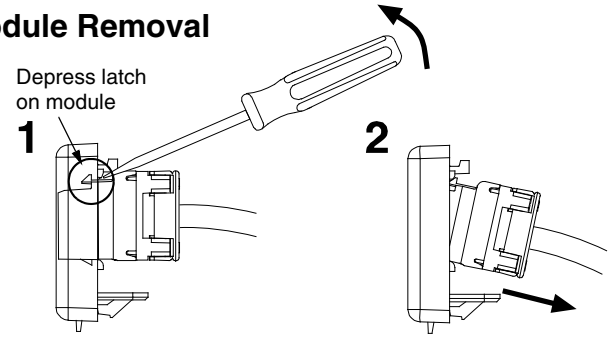

Faceplate Installation

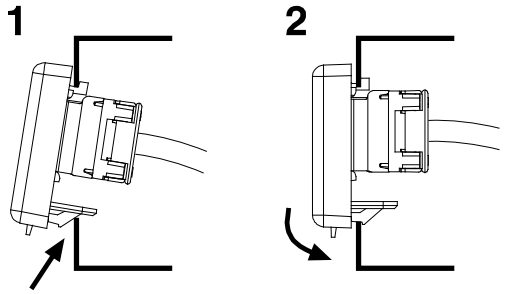

Faceplate Removal

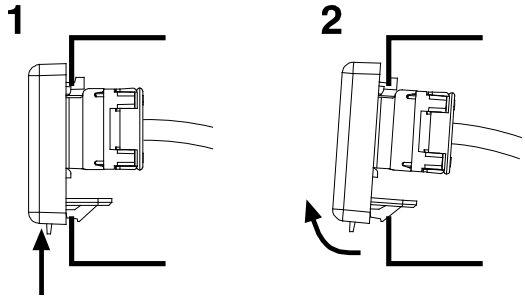

Recommended Cable Routing for Angled Panels

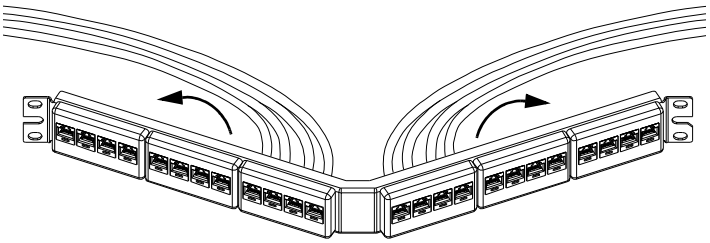

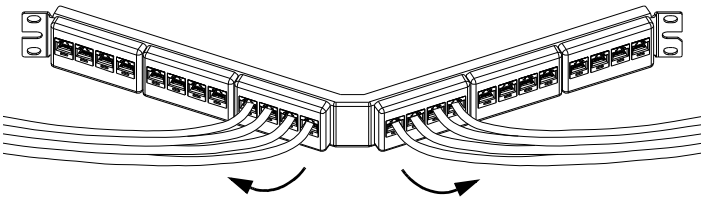

All cables should flow directly into vertical cable managers
on the corresponding side of the Angled Panel.

For Instructions in Local Languages and Technical Support:

www.panduit.com/resources/install_maintain.asp

PANDUIT

www.panduit.com

E-mail:
techsupport@panduit.com

Phone:
866-405-6654