THIS COPY IS PROVIDED ON A RESTRICTED BASIS AND IS NOT TO BE USED IN ANY WAY DETRIMENTAL TO THE INTERESTS OF PANDUIT CORP.

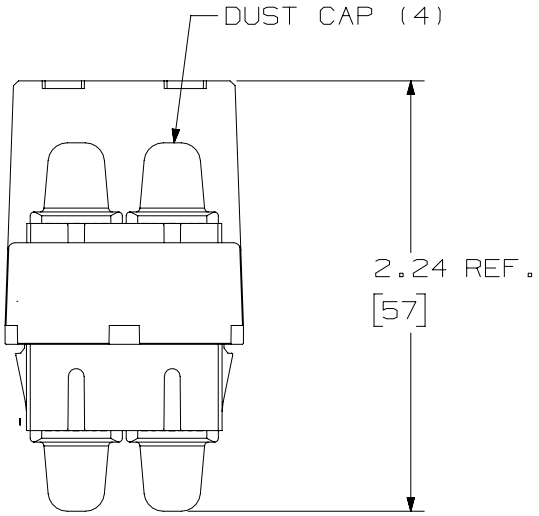

PANDUIT P/N	WEIGHT	SPLIT SLEEVE TYPE
CMDAQSC**	2.2 lbs/100 pcs (980.0 g/100 pcs)	PHOS BRONZE
CMDEISC**		
CMDBLSC**		
CMDBUSC**		
CMDAGSCZ**	2.2 lbs/100 pcs (980.0 g/100 pcs)	ZIRCONIA
CMDAQSCZ**		
CMDEISCZ**		
CMDBLSCZ**		
CMDBUSCZ**		

NOTES:
1. SEE CURRENT CATALOG FOR PART NUMBER SUFFIXES TO INDICATE COLOR OF MODULE BASE, AND/OR PACKAGE QUANTITIES.
2. SEE CATALOG FOR COMPLETE LIST OF PARTS APPLICABLE FOR USE WITH THIS PART.
3. MATERIALS:
   a. MODULE BASE: PLASTIC
   b. ADAPTER HOUSING: PLASTIC
   c. SPLIT SLEEVE: ZIRCONIA/PHOS BRONZE
   d. INNER LATCH: POLYETHERIMIDE
   e. DUST CAP: ELASTOMER
4. DIMENSIONS IN [ ] ARE IN METRIC.

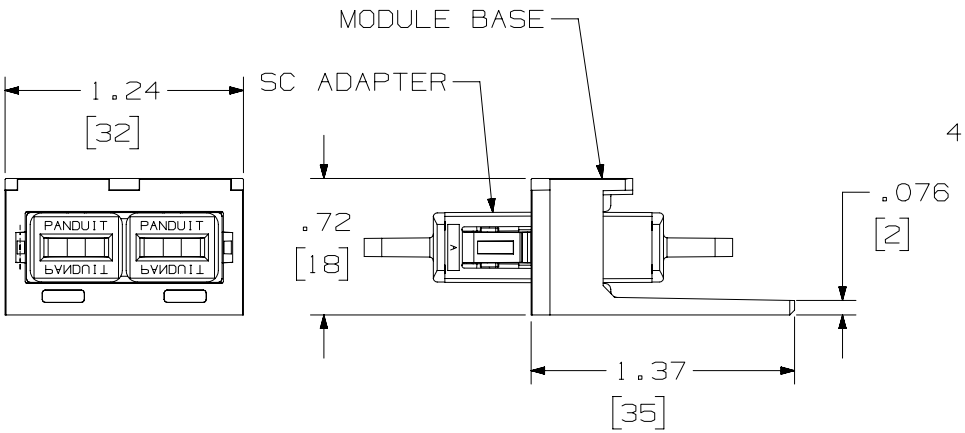

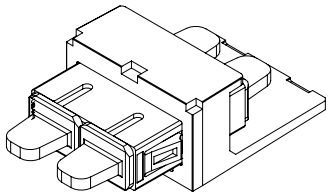

PART NUMBER
CMD**SC**, CMD**SCZ**

TITLE
MINI-COM DUAL MODULE SPACE DUPLEX SC MODULE

CUSTOMER DRAWING

ITEM REVISION NAME: M01115BG/01

DATASET FILE NAME: M01115BG_DC/01C

UNLESS OTHERWISE SPECIFIED, DIMENSIONAL TOLERANCES ARE: IN [mm]
.X ± .XXX ±
.XX ± ANGLES ±
THIRD ANGLE PROJECTION

MATERIAL: SEE NOTES

DRAWING NUMBER: 01115-09

DRAWN BY	DATE	CHK	SCALE		SIZE
MC	06-20-01	PJI	NONE	SHT 1 OF 1	A

REV	DATE	BY	CHK	APR	DESCRIPTION	ECN
5	5/15/15	JSP	WJM	TMK	A. REVISED DRAWING TITLE BLOCK.	01115-09

D10100DA/14