THIS COPY IS PROVIDED ON A RESTRICTED BASIS AND IS NOT TO BE USED IN ANY WAY DETRIMENTAL TO THE INTERESTS OF PANDUIT CORP.

NOTES:
1. THE MODULAR RAIL KIT IS DESIGNED FOR THE HD FLEX ENCLOSURES P/N FAMILY FLEX*U**.
2. DIMENSIONS IN [ ] ARE METRIC.
3. WEIGHT: .45LBS (204.1g)
4. REFERENCE PANDUIT DOCUMENT FS127 FOR INSTALLATION INSTRUCTIONS.

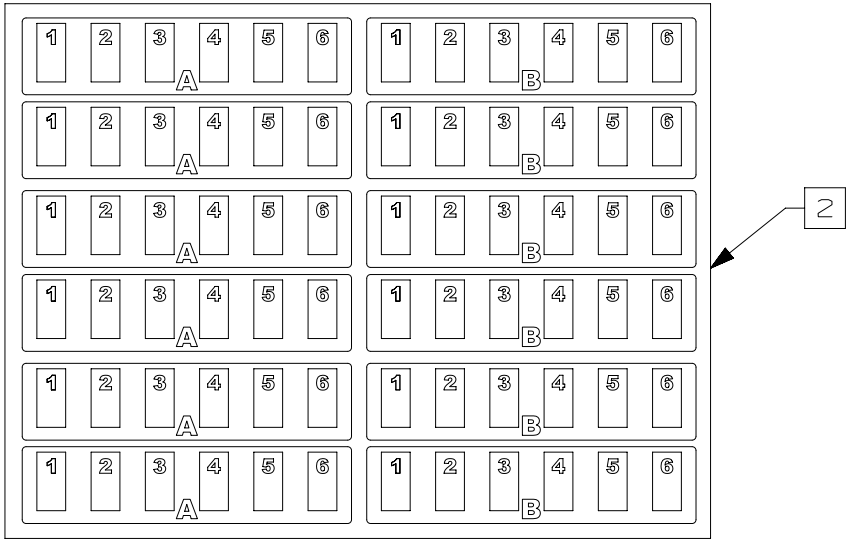

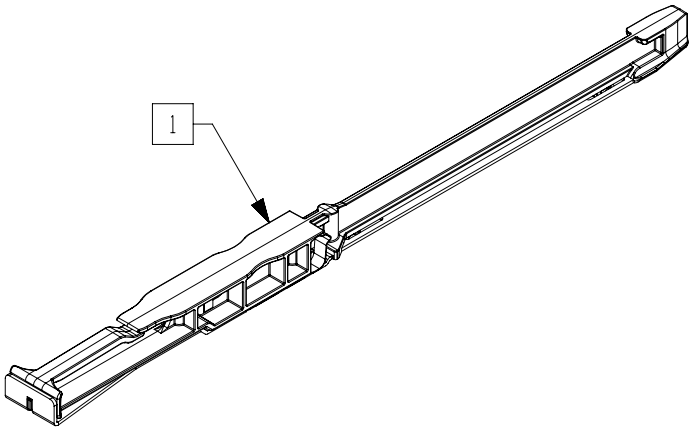

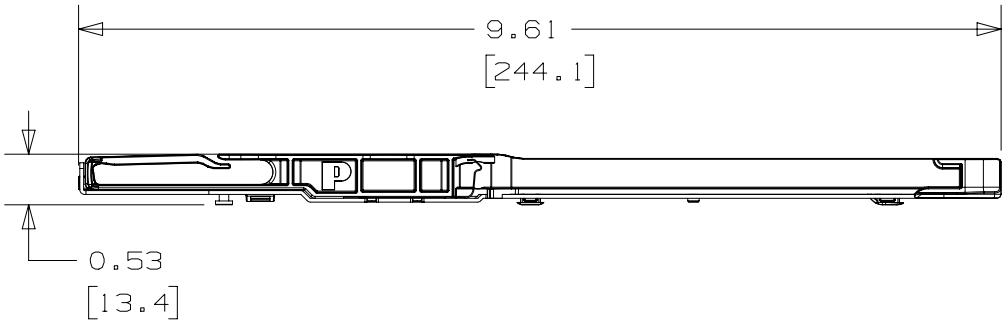

ITEM	DESCRIPTION	QTY.
1	RAIL ASSEMBLY (BLACK PLASTIC)	6
2	LABEL SHEET	1

REV	DATE	BY	CHK	APR	DESCRIPTION	ECN
00A	05-22-17	SAT	JDK	AW	RELEASED TO PRODUCTION	12F187LJ-DC

TITLE
HD FLEX 6-PORT ENCLOSURE RAIL KIT, 1RU, 6 RAILS, 12 LABELS
CUSTOMER DRAWING

ITEM REVISION NAME: 12F187LJ/04

DATASET FILE NAME: 12F187LJ_DC/04A

UNLESS OTHERWISE SPECIFIED, DIMENSIONAL TOLERANCES ARE: IN [mm]
.X ± .XXX ± .010 [0.3]
.XX ± .03 [0.8] ANGLES ±
THIRD ANGLE PROJECTION

PANDUIT

PART NO.: FLEX-RAIL06EN

DRAWING NUMBER: 12F187LJ-DC

DRAWN BY	DATE	CHK	SCALE		SIZE
SAT	05-08-17	JDK	1 : 4	SHT 1 OF 1	A