THIS COPY IS PROVIDED ON A RESTRICTED BASIS AND IS NOT TO BE USED IN ANY WAY DETRIMENTAL TO THE INTERESTS OF PANDUIT CORP.

PANDUIT P/N	WEIGHT
CMT4	5.04 LBS/EACH 2.28 Kg/EACH

NOTES:
1. VISIT OUR ON-LINE CATALOG AT WWW.PANDUIT.COM FOR A CURRENT LIST OF PRODUCTS APPLICABLE FOR USE WITH THIS PART.
2. COMPONENTS:
   1- TROUGH
   4- #12-24 X 1/2" SCREWS
   4- M6 X 15mm SCREWS
3. DIMENSIONS IN PARENTHESIS ARE METRIC.

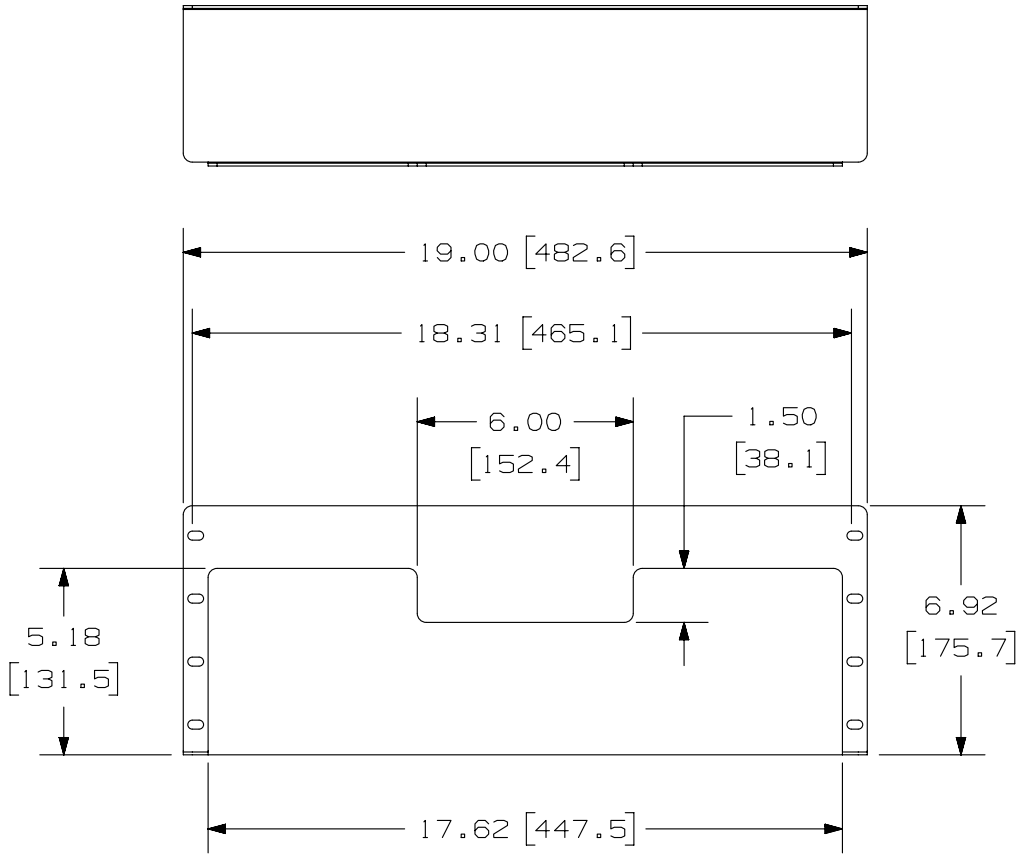

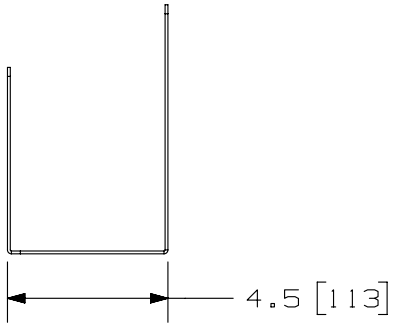

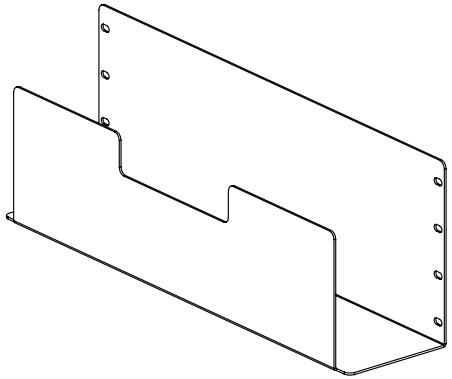

REV	DATE	BY	CHK	APR	DESCRIPTION	ECN
02B	6-23-14	BAME	FGR	TCO	REVISED TITLE BLOCK	00852-103
R	6-7-04	JDWE			RELEASED TO PRODUCTION	00852-103

TITLE
4 RU RACK MOUNT TROUGH
(CMT4)
CUSTOMER DRAWING

ITEM REVISION NAME: M00852CM/02

DATASET FILE NAME: M00852CM_DC/02B

PANDUIT

UNLESS OTHERWISE SPECIFIED, DIMENSIONAL TOLERANCES ARE: IN [mm]
.X ± .XXX ±
.XX ± ANGLES ±
THIRD ANGLE PROJECTION

MATERIAL: SEE NOTES

DRAWING NUMBER: 00852-103

DRAWN BY	DATE	CHK	SCALE		SIZE
JDWE	6-7-04		NONE	SHT 1 OF 1	A