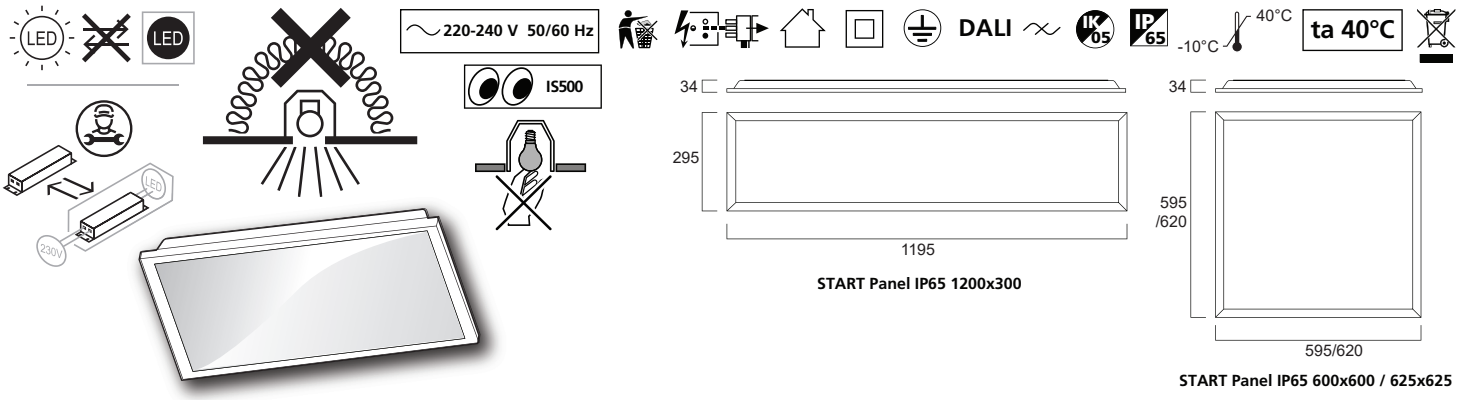
LED
LED
220-240 V 50/60 Hz
IS500
DALI
IK 05
IP 65
-10°C
40°C
ta 40°C
34
295
1195
START Panel IP65 1200x300
34
595
/620
595/620
START Panel IP65 600x600 / 625x625

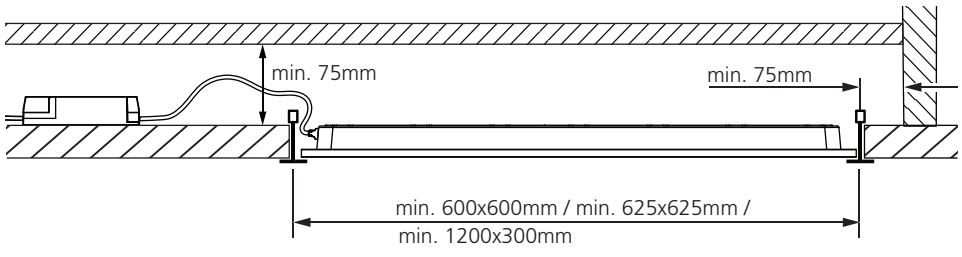
min. 75mm
min. 75mm
min. 600x600mm / min. 625x625mm /
min. 1200x300mm

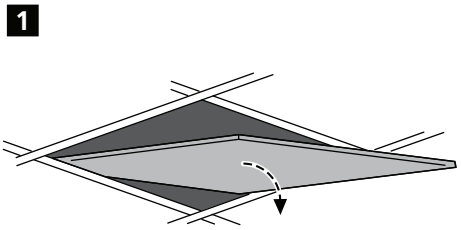
1

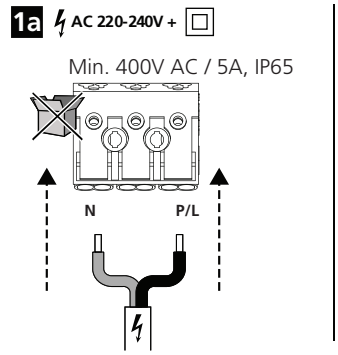
1a
AC 220-240V +
Min. 400V AC / 5A, IP65
N
P/L

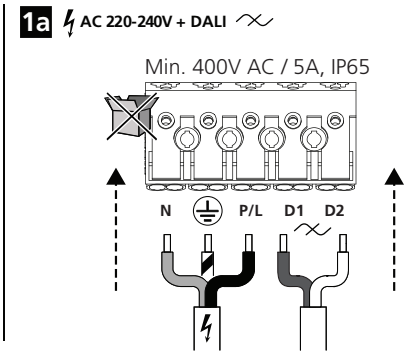
1a
AC 220-240V + DALI
Min. 400V AC / 5A, IP65
N
P/L
D1
D2

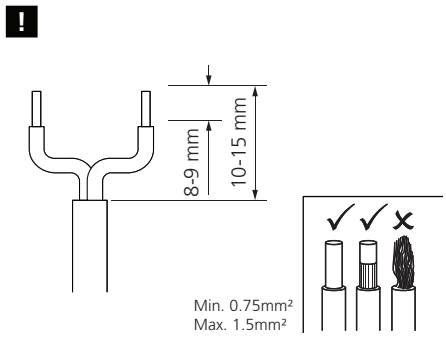
!
8-9 mm
10-15 mm
Min. 0.75mm²
Max. 1.5mm²

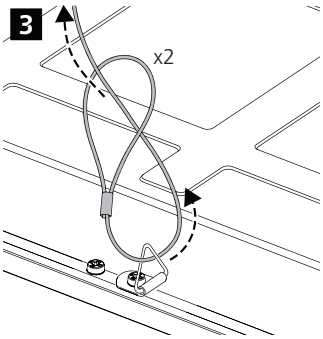
3
x2

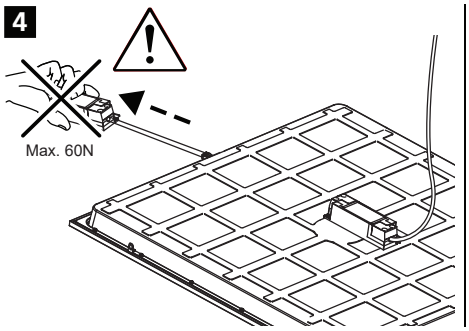
4
Max. 60N

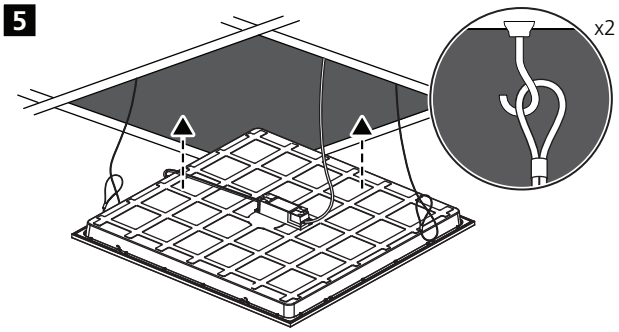
5
x2

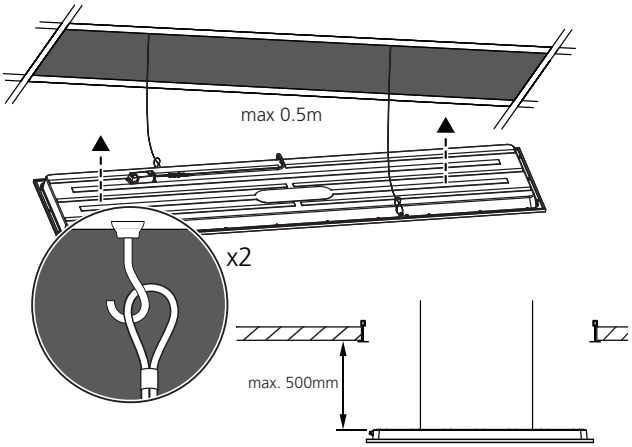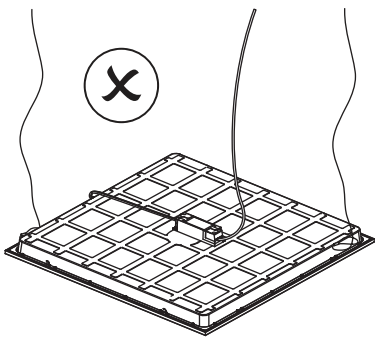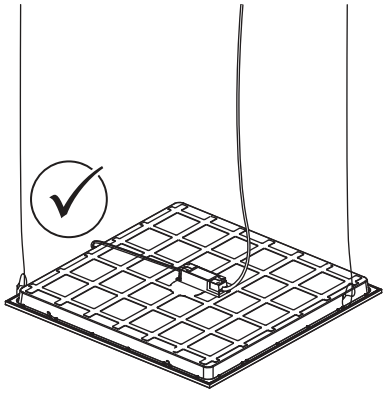
max 0.5m
x2
max. 500mm