THIS COPY IS PROVIDED ON A RESTRICTED BASIS AND IS NOT TO BE USED IN ANY WAY DETRIMENTAL TO THE INTERESTS OF PANDUIT CORP.

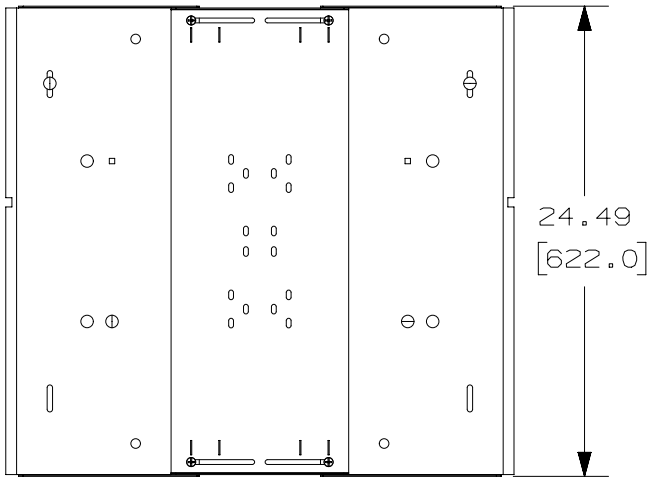

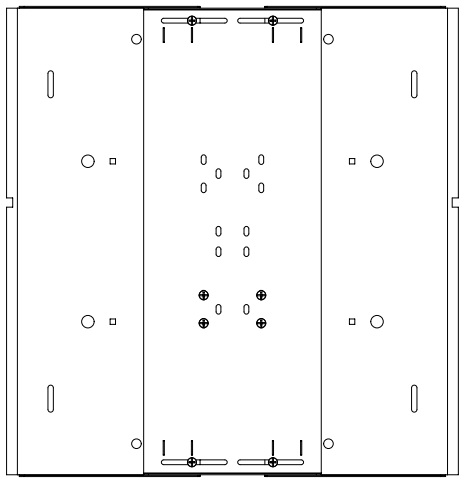

PANDUIT P/N	WEIGHT
PE2VWF PE2VWFWH	17.8 LBS/EACH 8.1 kg/EACH

NOTES:
1. VISIT OUR ON-LINE CATALOG AT WWW.PANDUIT.COM FOR A CURRENT LIST OF PRODUCTS APPLICABLE FOR USE WITH THIS PART.
2. COMPONENTS:
   - 1- ADJUSTABLE WIDTH WATERFALL ASSY
   - 1- R2P RACK MOUNT BRACKET
   - 4- M6×1.0 CARRIAGE BOLTS
   - 4- M6×1.0 SERRATED HEX NUTS
   - 4- M6×1.0 PAN HEAD MACHINE SCREWS
3. DIMENSIONS IN PARENTHESES ARE METRIC.

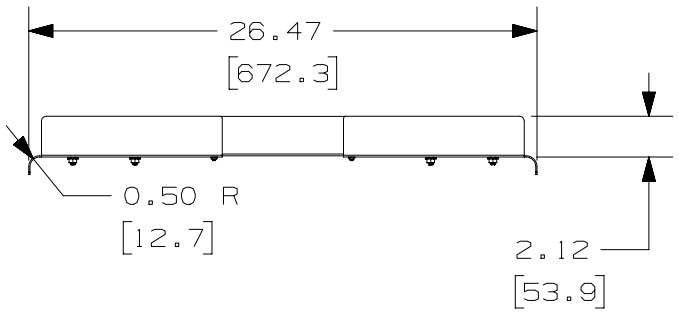

R4P RACK CONFIGURATION

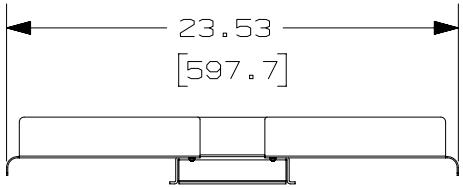

R2P, R2P6S, ER4P, B4P RACK CONFIGURATION

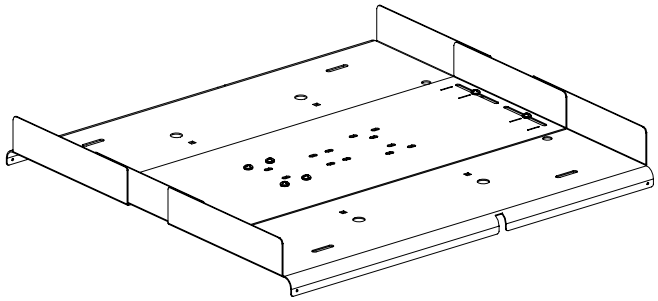

REV	DATE	BY	CHK	APR	DESCRIPTION	ECN
00A	3-13-19	RYB			RELEASED TO PRODUCTION	M09000JK

TITLE
ADJUSTABLE WIDTH WATERALL FOR USE WITH PE2V* VERTICAL CABLE MANAGERS (PE2VWF / PE2VWFWH)
CUSTOMER DRAWING

ITEM REVISION NAME: 00072GDZ/02

DATASET FILE NAME: 00072GDZ_DC/02A

UNLESS OTHERWISE SPECIFIED, DIMENSIONAL TOLERANCES ARE: IN [mm]
.X ± .XXX ±
.XX ± ANGLES ±
THIRD ANGLE PROJECTION

MATERIAL: STEEL

DRAWING NUMBER: 00072GDZ-DC

DRAWN BY	DATE	CHK	SCALE		SIZE
RYB	3-13-19	KRKE	NONE	SHT 1 OF 3	A

D10100DA/15

THIS COPY IS PROVIDED ON A RESTRICTED BASIS AND IS NOT TO BE USED IN ANY WAY DETRIMENTAL TO THE INTERESTS OF PANDUIT CORP.

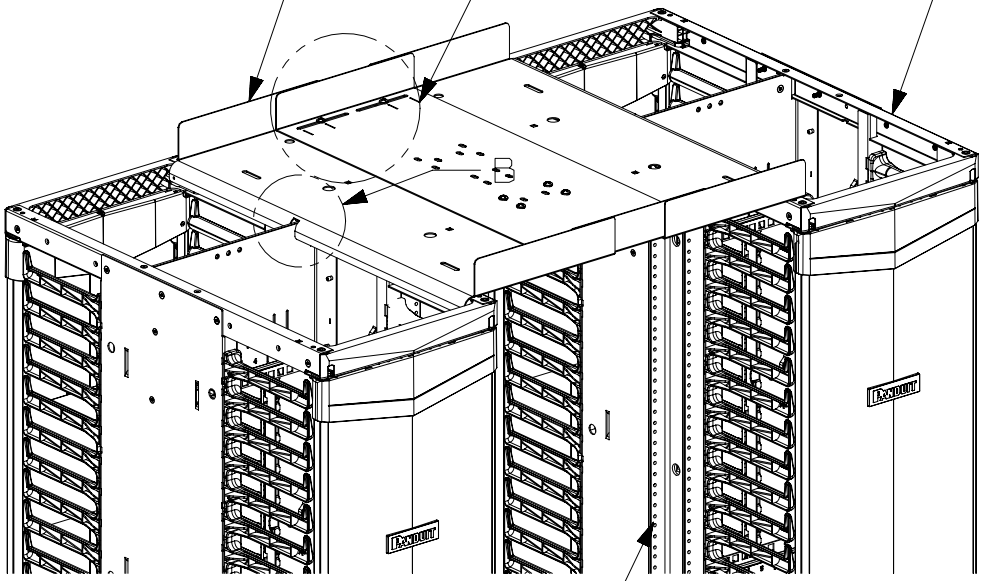

CORRECT WIDTH FOR USE WITH AN R2P RACK IS ADJUSTED BY LOOSENING THE SET SCREWS AND SLIDING TO ALIGN WITH THE INNER NOTCHES AS SHOWN

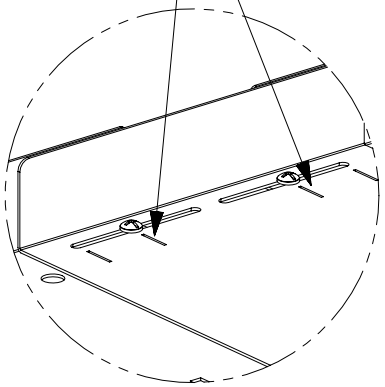

DETAIL A
SCALE 1:4

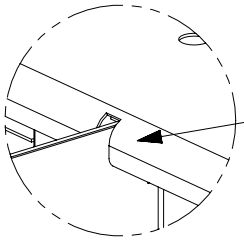

BEND RADIUS FEATURE NOTCHED TO CLEAR THE PE2V CABLE MANAGER BACKBONE. THE WATERFALL CAN BE REVERSED IF THE PE2V CABLE MANAGER IS INSTALLED WITH THE 40% CABLE AREA SET TO THE FRONT OF THE RACK

DETAIL B
SCALE 1:4

R2P RACK CONFIGURATION

REV	DATE	BY	CHK	APR	DESCRIPTION	ECN
00A	3-13-19	RYB			SEE SHEET 1	M09000JK

TITLE
ADJUSTABLE WIDTH WATERALL FOR USE WITH PE2V* VERTICAL CABLE MANAGERS (PE2VWF / PE2VWFWH)
CUSTOMER DRAWING

ITEM REVISION NAME: 00072GDZ/02

DATASET FILE NAME: 00072GDZ_DC/02A

UNLESS OTHERWISE SPECIFIED, DIMENSIONAL TOLERANCES ARE: IN [mm]
.X ± .XXX ±
.XX ± ANGLES ±
THIRD ANGLE PROJECTION

MATERIAL: STEEL

DRAWING NUMBER: 00072GDZ-DC

DRAWN BY	DATE	CHK	SCALE		SIZE
RYB	3-13-19	KRKE	NONE	SHT 2 OF 3	A

D10100DA/15

THIS COPY IS PROVIDED ON A RESTRICTED BASIS AND IS NOT TO BE USED IN ANY WAY DETRIMENTAL TO THE INTERESTS OF PANDUIT CORP.

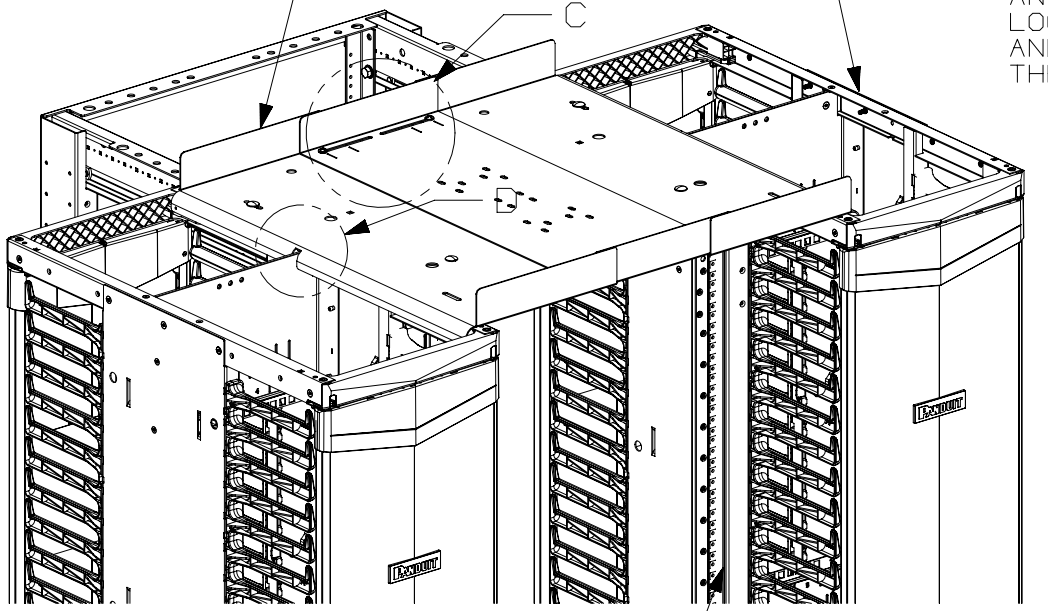

CORRECT WIDTH FOR USE WITH AN R4P RACK IS ADJUSTED BY LOOSENING THE SET SCREWS AND SLIDING TO ALIGN WITH THE OUTER NOTCHES AS SHOWN

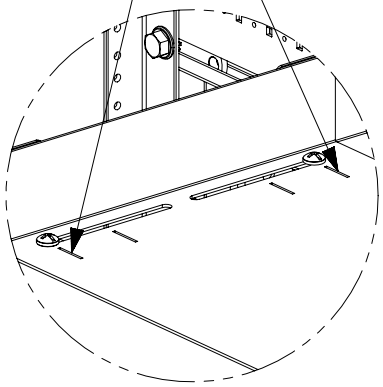

DETAIL C
SCALE 1:4

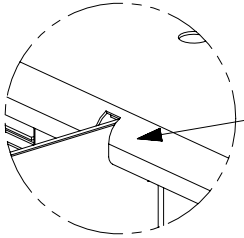

BEND RADIUS FEATURE NOTCHED TO CLEAR THE PE2V CABLE MANAGER BACKBONE. THE WATERFALL CAN BE REVERSED IF THE PE2V CABLE MANAGER IS INSTALLED WITH THE 40% CABLE AREA SET TO THE FRONT OF THE RACK

DETAIL D
SCALE 1:4

R4P RACK CONFIGURATION

REV	DATE	BY	CHK	APR	DESCRIPTION	ECN
00A	3-13-19	RYB			SEE SHEET 1	M09000JK

TITLE
ADJUSTABLE WIDTH WATERALL FOR USE WITH PE2V* VERTICAL CABLE MANAGERS (PE2VWF / PE2VWFWH)
CUSTOMER DRAWING

ITEM REVISION NAME: 00072GDZ/02

DATASET FILE NAME: 00072GDZ_DC/02A

UNLESS OTHERWISE SPECIFIED, DIMENSIONAL TOLERANCES ARE: IN [mm]
.X ± .XXX ±
.XX ± ANGLES ±
THIRD ANGLE PROJECTION

MATERIAL: STEEL

DRAWING NUMBER: 00072GDZ-DC

DRAWN BY	DATE	CHK	SCALE	SHT 3 OF 3	SIZE
RYB	3-13-19	KRKE	NONE		A

D10100DA/15