NetKey

Network Components
Keystone Cabling System

NetKey 86mm x 86mm Shuttered Faceplates

Part Numbers: NKFPL86F1S**, NKFPLUKF1S**, NKFPL86F2S**, NKFPLUKF2S**, NKFPL86F4S**, NKFPLUKF4S**

© Panduit Corp. 2017

INSTALLATION INSTRUCTIONS

NK460B

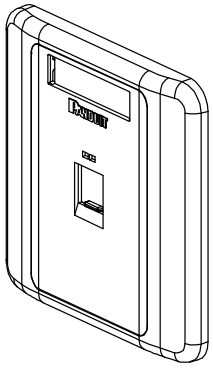

NKFPL86F1S
NKFPLUKF1S**

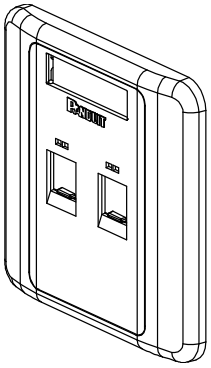

NKFPL86F2S
NKFPLUKF2S**

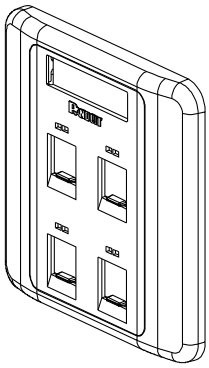

NKFPL86F4S
NKFPLUKF4S**

1.

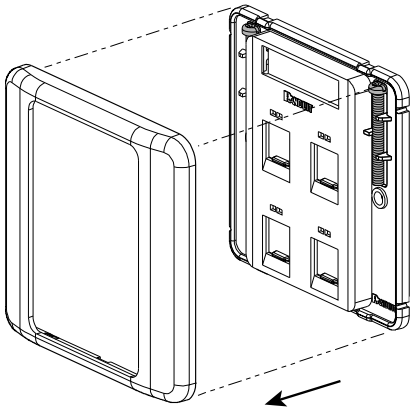

2. Module Installation

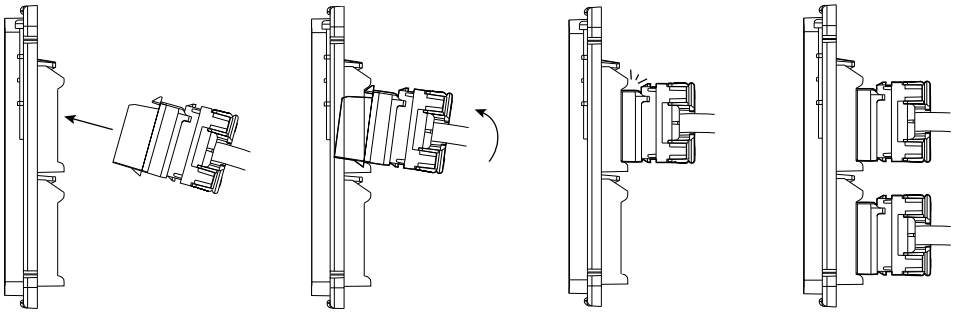

3.

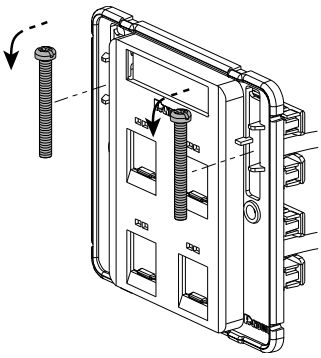

4.

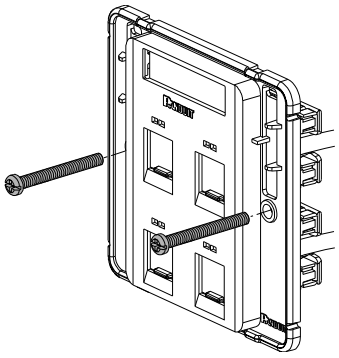

5.

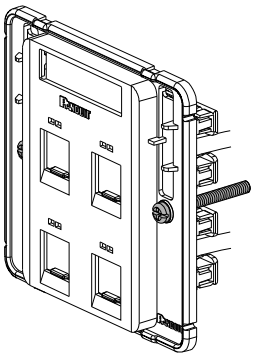

6.

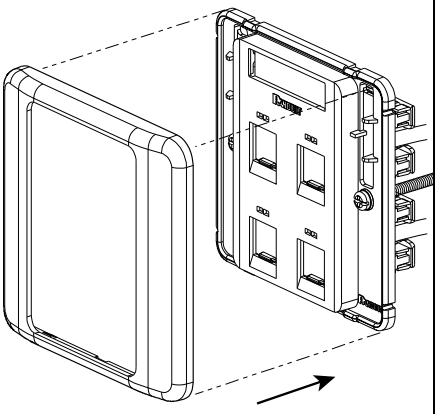

**Denotes color.

For Instructions in Local Languages and Technical Support:

www.panduit.com/resources/install_maintain.asp

PANDUIT

www.panduit.com

E-mail:
techsupport@panduit.com

Phone:
866-405-6654