THIS COPY IS PROVIDED ON A RESTRICTED BASIS AND IS NOT TO BE USED IN ANY WAY DETRIMENTAL TO THE INTERESTS OF PANDUIT CORP.

NOTES:
1. DIAMETER DIMENSION SHOWN FOR REFERENCE ONLY.
2. DIMENSIONS IN BRACKETS [ ] ARE ENGLISH.
3. FOR PART NUMBERS AND LENGTHS OTHER THAN THOSE SHOWN, CONTACT YOUR PANDUIT SALES PERSON.
4. CABLE MEETS REQUIRMENTS OF EUROCLASS B2ca, s1a, d1 & a1 PER EN 50575.
5. CABLE DECLARATION OF PERFORMANCE IS PAN-DOP-FA032.

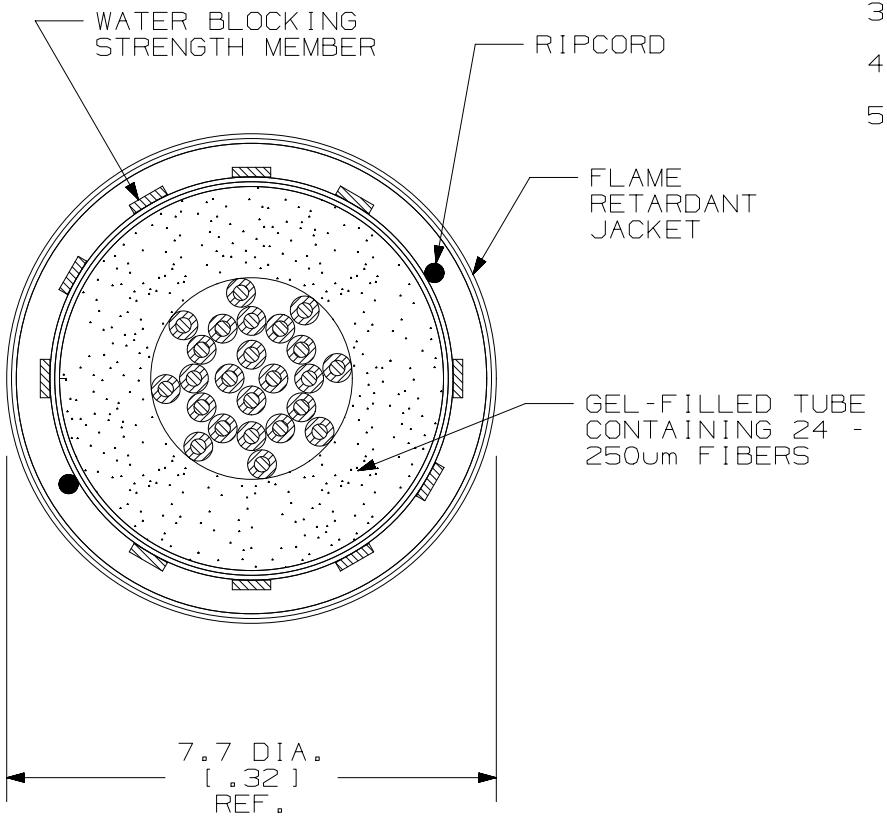

CABLE DESCRIPTION			
FIBER OPTIC INDOOR-OUTDOOR CENTRAL TUBE CABLE			
PART NUMBERS AVAILABLE	FIBER TYPE	JACKET RATING	COLOR
FACC924-14	SINGLEMODE 9/125um	LSZH	BLACK
FACC624-14	MULTIMODE 62.5/125um	LSZH	BLACK
FACC524-14	MULTIMODE 50/125um OM2	LSZH	BLACK
FACCX24-14	MULTIMODE 50/125um OM3	LSZH	BLACK
FACCZ24-14	MULTIMODE 50/125um OM4	LSZH	BLACK

TECHNICAL SPECIFICATIONS		
MAXIMUM LOSS	BEND RADIUS	
	INSTALLATION	LONG TERM
3.5 dB/KM @ 850nm 1.5 dB/KM @ 1300nm	100 mm (3.9 in)	60 mm (2.4 in)
SINGLEMODE MAXIMUM LOSS	TENSILE LOAD - LSZH RATED	
	INSTALLATION	LONG TERM
.75 dB/KM @ 1310nm .75 dB/KM @ 1500nm	1500 N (337.5 lbf)	700 N (157.5 lbf)

TEMPERATURE		
INSTALLATION	OPERATION	STORAGE
-20° C TO +70° C -4° F TO +158° F	-20° C TO +70° C -4° F TO +158° F	-40° C TO +75° C -40° F TO +167° F

REV	DATE	BY	CHK	APR	DESCRIPTION	ECN
00A	03-13-18	SAT	WMA	SKH	INITIAL RELEASE	M02432DU-DC-24

TITLE
FIBER OPTIC INDOOR-OUTDOOR CABLE WITH 24 FIBERS IN A CENTRAL TUBE

CUSTOMER DRAWING

ITEM REVISION NAME: M02432DU/00

DATASET FILE NAME: M02432DU_DC_24/00A

UNLESS OTHERWISE SPECIFIED, DIMENSIONAL TOLERANCES ARE: IN [mm]
.X ± .XXX ± .010 [0.3]
.XX ± .03 [0.8] ANGLES ±
THIRD ANGLE PROJECTION

PART NO.: FACC*24-14

DRAWING NUMBER: M02432DU-DC-24

DRAWN BY	DATE	CHK	SCALE		SIZE
SAT	03-13-18	WMA	NONE	SHT 1 OF 1	A