THIS COPY IS PROVIDED ON A RESTRICTED BASIS AND IS NOT TO BE USED IN ANY WAY DETRIMENTAL TO THE INTERESTS OF PANDUIT CORP.

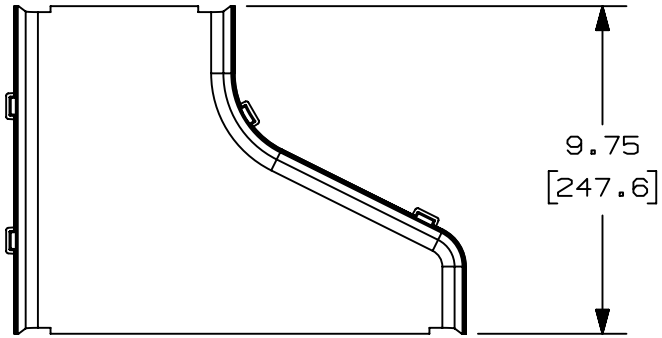

PANDUIT PART NUMBER	WEIGHT	MATERIAL
FRRF126L	1.01 LB/EACH (460g/EACH)	ABS
FRRF126LL	1.01 LB/EACH (460g/EACH)	PC/ABS

NOTES:

1. SEE CURRENT CATALOG FOR ADDITIONAL PART SUFFIXES TO INDICATE COLOR AND/OR PACKAGE QUANTITY.
2. THE FIBERRUNNER 12x4 TRANSITION LEFT WITH 6" EXITS IS DESIGNED WITH A MINIMUM 2" (50.8) BEND RADIUS TO PROTECT FIBER OPTIC CABLES.
3. DIMENSIONS IN PARENTHESES ARE IN METRIC.

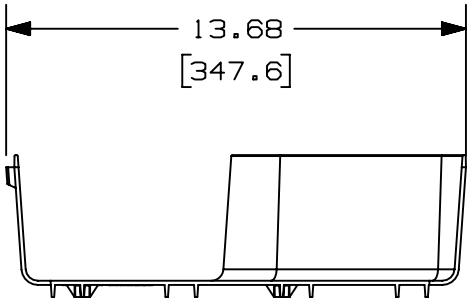

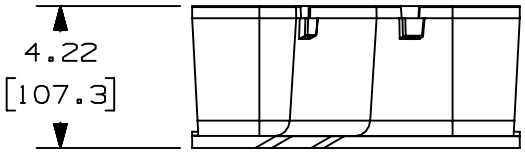

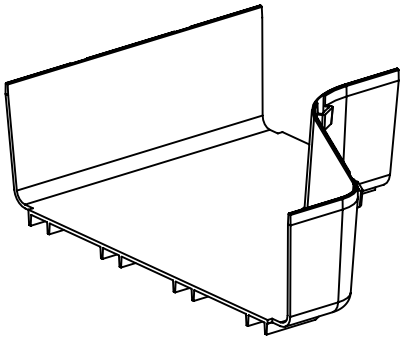

REV	DATE	BY	CHK	APR	DESCRIPTION	ECN
02B	8/28/2020	MES	DWR	DWR	UPDATED TITLE BLOCK, ADDED PART NUMBER	V09002DZ/11

TITLE

FIBERRUNNER 12x4 TRANSITION LEFT WITH 6" EXIT (FRRF126L, FRRF126LL)

CUSTOMER DRAWING

ITEM REVISION NAME: D37617XC/02

DATASET FILE NAME: D37617XC_DC_FRRF126L/02B

UNLESS OTHERWISE SPECIFIED, DIMENSIONAL TOLERANCES ARE:
(.X) ± (.XXX) ±
(.XX) ±.03 (.8) ANGLES ±

THIRD ANGLE PROJECTION

MATERIAL: SEE PART NUMBER TABLE ABOVE

DRAWING NUMBER: 37617-114

DRAWN BY	DATE	CHK	SCALE	SIZE
JNHU	5-24-01	HIW	NONE	A

SHT 1 OF 1

D10100DA/20