THIS COPY IS PROVIDED ON A RESTRICTED BASIS AND IS NOT TO BE USED IN ANY WAY DETRIMENTAL TO THE INTERESTS OF PANDUIT CORP.

NOTES:
1. SEE CATALOG FOR COMPLETE LIST OF PARTS APPLICABLE FOR USE WITH THIS PART.
2. DIMENSIONS IN BRACKETS ARE METRIC.
3. MATERIAL: GALVANNEALED STEEL
   COLOR: BLACK
4. MOUNTING BRACKETS ADJUSTABLE IN 1/2" INCREMENTS.
5. ALL MATERIALS AND COMPONENTS USED MEET THE MATERIAL RESTRICTIONS OF RoHS (EUROPEAN DIRECTIVE 2011/65/EC ON THE RESTRICTION OF HAZARDOUS SUBSTANCES) AS PROPOSED BY THE RoHS TECHNICAL ADAPTATION COMMITEE.

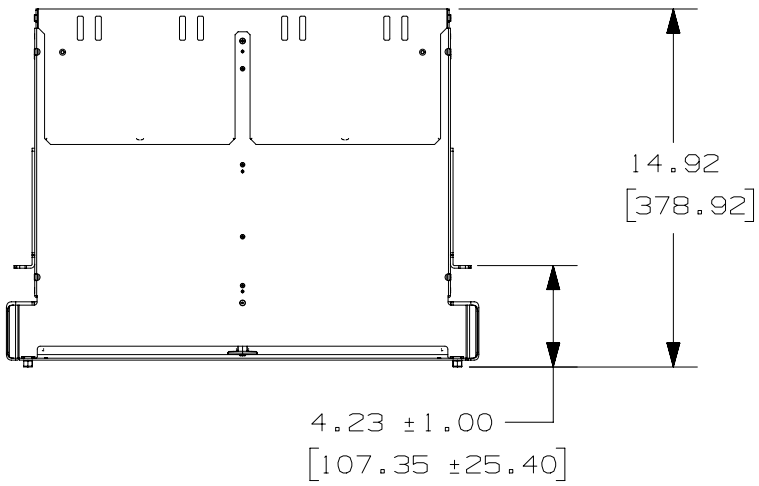

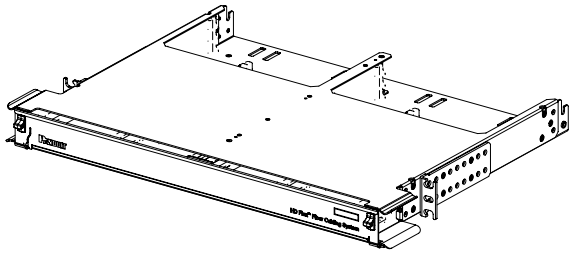

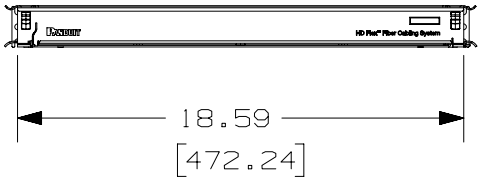

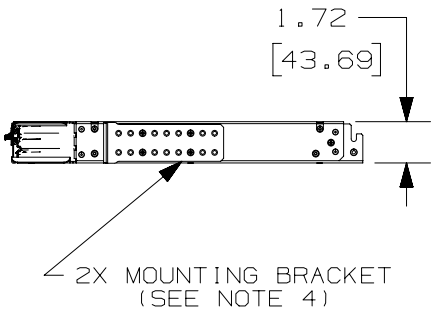

PANDUIT PART NO.	WEIGHT
FLEX1U	12.20 lbs (5.55 kg)

REV	DATE	BY	CHK	APR	DESCRIPTION	ECN
01	03-02-16	SAT	BJBE	TMK	RELEASED TO PRODUCTION	12F187AB-DC

TITLE
HD FLEX 1RU ENCLOSURE (FLEX1U)
CUSTOMER DRAWING

ITEM REVISION NAME: 12F187AB/07

DATASET FILE NAME: 12F187AB_DC/07A

UNLESS OTHERWISE SPECIFIED, DIMENSIONAL TOLERANCES ARE: IN [mm]

DIMENSIONS ARE FOR REFERENCE ONLY

THIRD ANGLE PROJECTION

PART NO.: FLEX1U

DRAWING NUMBER: 12F187AB-DC

DRAWN BY	DATE	CHK	SCALE	SHT	SIZE
SAT	11-13-14	JESA	1 : 8	SHT 1 OF 1	A