FIBERRUNNER 4x2 2-PORT AND 6x4 3-PORT SPILL-OUT TO CORRUGATED TUBING FOR USE WITH FIBERRUNNER ROUTING SYSTEMS

Part Number(s): FRIDT4X4, FRIDT6X4, FRIDT4X4L, FRIDT6X4L

© Panduit Corp. 2020

INSTALLATION INSTRUCTIONS

RW137

Printed in U.S.A.

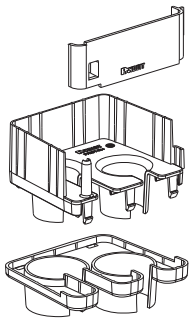

FRIDT4X4

OPTION A - FITTING TO DUCT

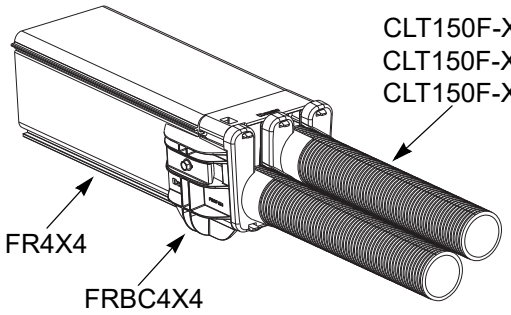

OPTION B - FITTING TO FITTING

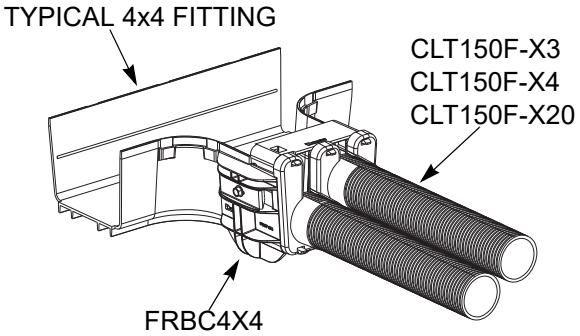

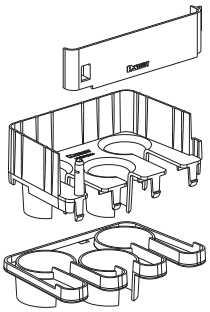

FRIDT6X4

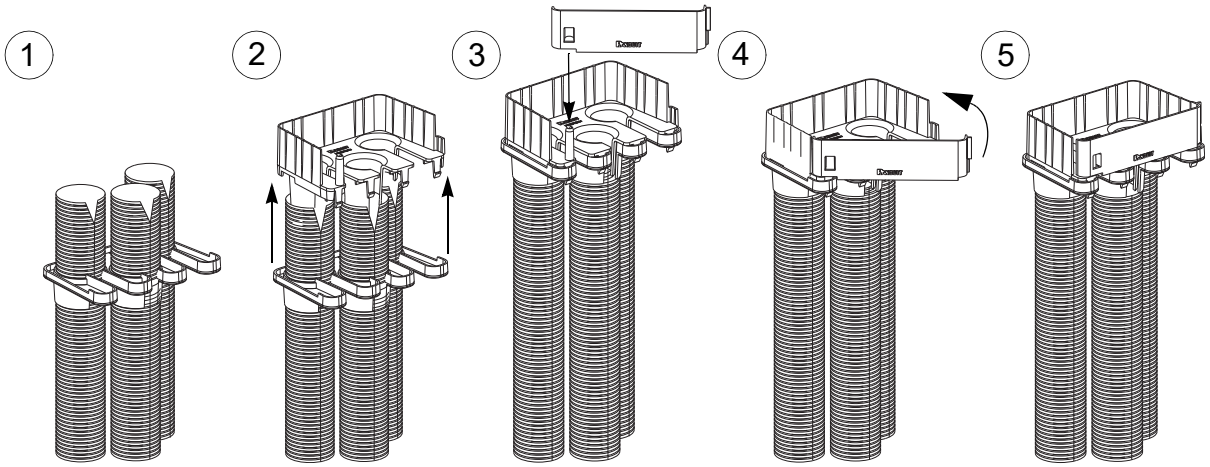

OPTION A - ***FIBERRUNNER*** 12x4 VERTICAL TEE FITTING

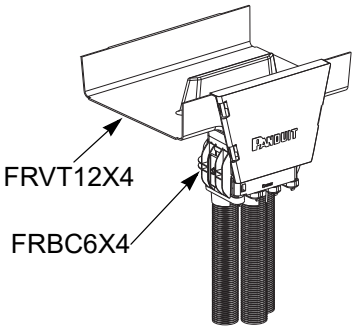

OPTION B - FITTING TO DUCT

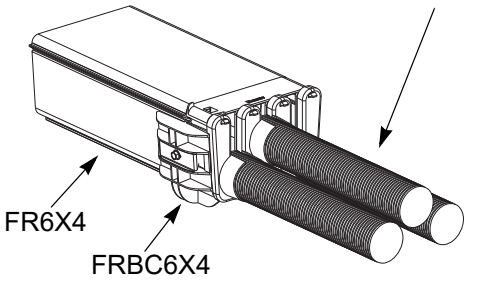

OPTION C - FITTING TO FITTING

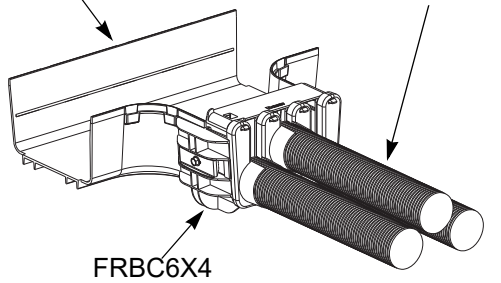

For Instructions in Local Languages and Technical Support:
www.panduit.com/resources/install_maintain.asp

www.panduit.com

E-mail:
techsupport@panduit.com

Fax:
866-405-6654