THIS COPY IS PROVIDED ON A RESTRICTED BASIS AND IS NOT TO BE USED IN ANY WAY DETRIMENTAL TO THE INTERESTS OF PANDUIT CORP.

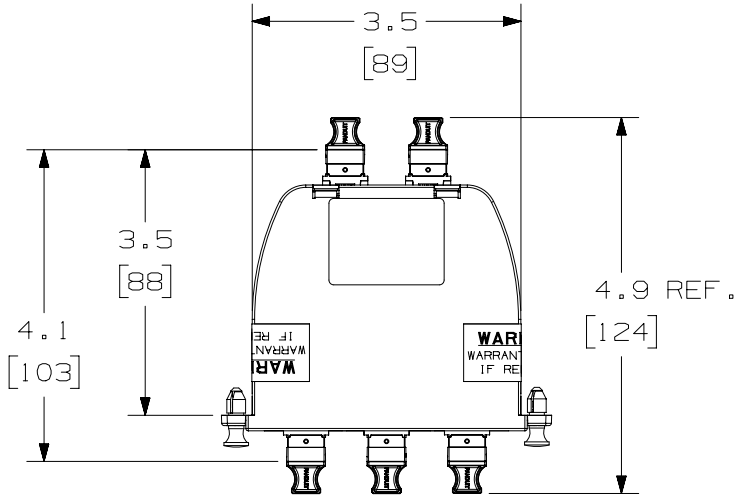

NOTES:
1. SEE CURRENT CATALOG FOR PART NUMBER SUFFIXES.
2. SEE CATALOG FOR COMPLETE LIST OF PARTS APPLICABLE FOR USE WITH THIS PRODUCT.
3. PART NUMBERS: SEE SHEET 2
4. REFER TO PANDUIT WEBSITE FOR DARK FIBER APPLICATION GUIDE FOR LINK DESIGN.
5. MATERIALS:
   A. BOX AND LID: PLASTIC
   B. ADAPTER: PLASTIC
6. CASSETTE WEIGHT: 4.2oz [119g]
7. DIMENSIONS IN BRACKETS ARE METRIC.

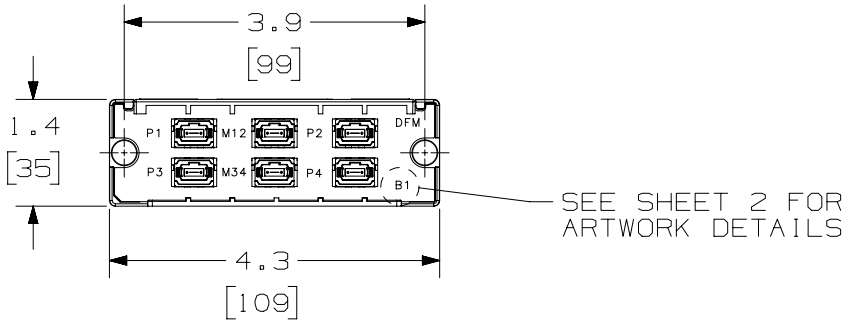

FRONT VIEW

SHOWN W/O DUSTCAPS

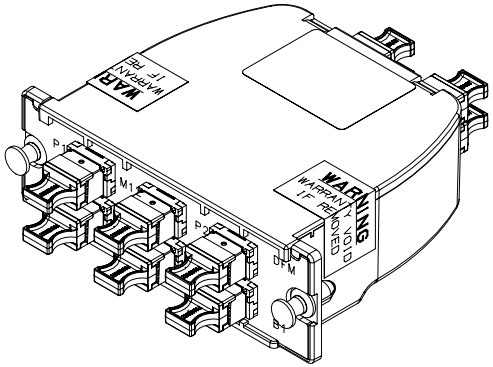

REV	DATE	BY	CHK	APR	DESCRIPTION	ECN
00	09-15-15	SAT	JGD	RAR	RELEASED TO PRODUCTION	13F245AD-DC

TITLE

DARK FIBER CONVERSION CASSETTE
48 FIBER

CUSTOMER DRAWING

ITEM REVISION NAME: 13F245AD/01

DATASET FILE NAME: 13F245AD_DC/00A

UNLESS OTHERWISE SPECIFIED, DIMENSIONAL TOLERANCES ARE: IN [mm]

.X ± .1 [2.5] .XXX ± .010 [0.3]
.XX ± .03 [0.8] ANGLES ±

THIRD ANGLE PROJECTION

PART NO.: SEE SHEET 2 & 3

DRAWING NUMBER: 13F245AD-DC

DRAWN BY	DATE	CHK	SCALE	SHT 1 OF 3	SIZE
SAT	09-15-15	JGD	NONE		A

THIS COPY IS PROVIDED ON A RESTRICTED BASIS AND IS NOT TO BE USED IN ANY WAY DETRIMENTAL TO THE INTERESTS OF PANDUIT CORP.

DARK FIBER CONVERSION CASSETTE	
PART NUMBER	DESCRIPTION
FC4ZU-48-NMNMA	48 FIBER 50/125um OM4 ULTRA, METHOD A
FC4ZU-48-NMNMB1	48 FIBER 50/125um OM4 ULTRA, METHOD B1
FC4ZU-48-NMNMB2	48 FIBER 50/125um OM4 ULTRA, METHOD B2

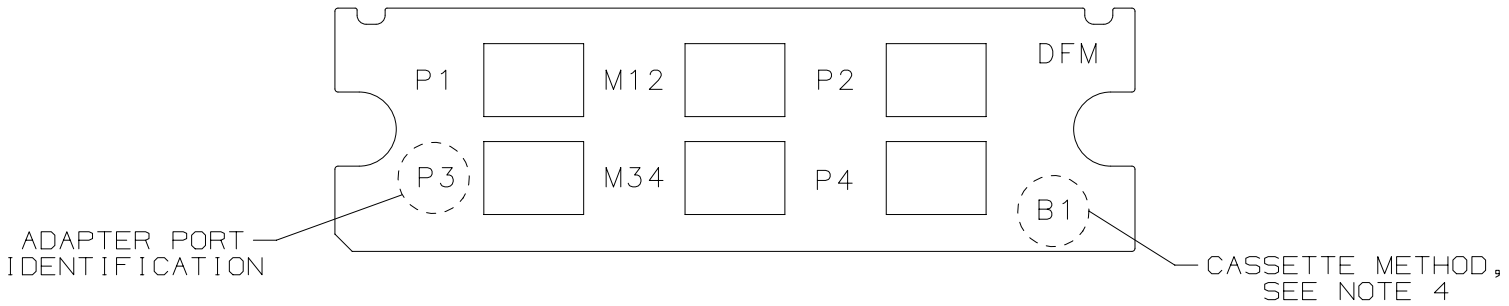

REV	DATE	BY	CHK	APR	DESCRIPTION	ECN
00	09-15-15	SAT	JGD	RAR	RELEASED TO PRODUCTION	13F245AD-DC

TITLE
DARK FIBER CONVERSION CASSETTE
48 FIBER
CUSTOMER DRAWING

ITEM REVISION NAME: 13F245AD/01

DATASET FILE NAME: 13F245AD_DC/00A

UNLESS OTHERWISE SPECIFIED, DIMENSIONAL TOLERANCES ARE: IN [mm]
.X ± .XXX ± .010 [0.3]
.XX ± .03 [0.8] ANGLES ±
THIRD ANGLE PROJECTION

PANDUIT

PART NO.: SEE TABLE

DRAWING NUMBER: 13F245AD-DC

DRAWN BY	DATE	CHK	SCALE		SIZE
SAT	09-15-15	JGD	NONE	SHT 2 OF 3	A