Hydro-One Adapter to * Telect® 2x2 ** WaveTrax™ Cable Management System

For Use With *PANDUIT* *FIBERRUNNER* 2x2 Cable Routing System

Part Numbers: FCF2X2, F14PWN-L, FBC2X2

© Panduit Corp. 2015

INSTALLATION INSTRUCTIONS

RW198

1

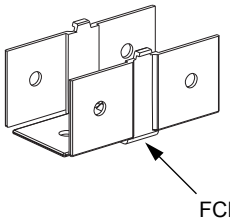

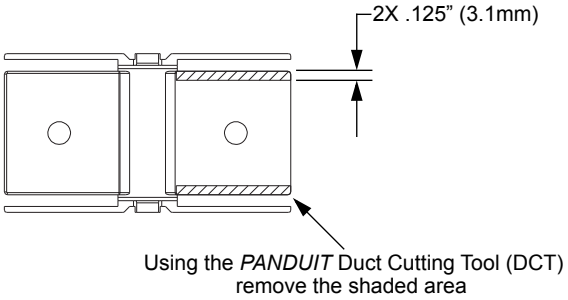

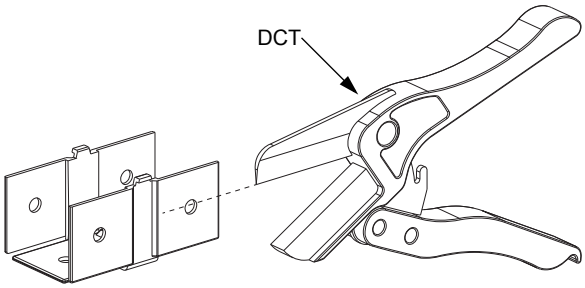

2

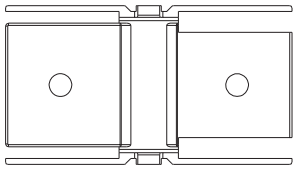

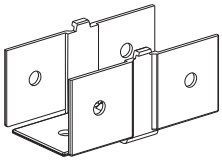

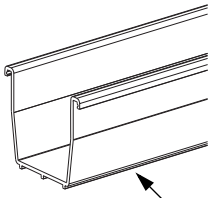

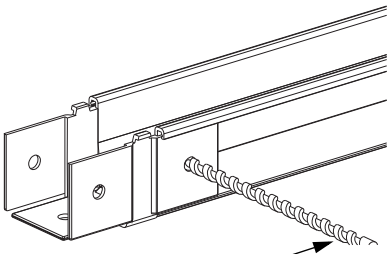

3

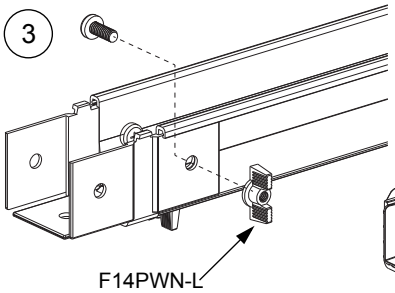

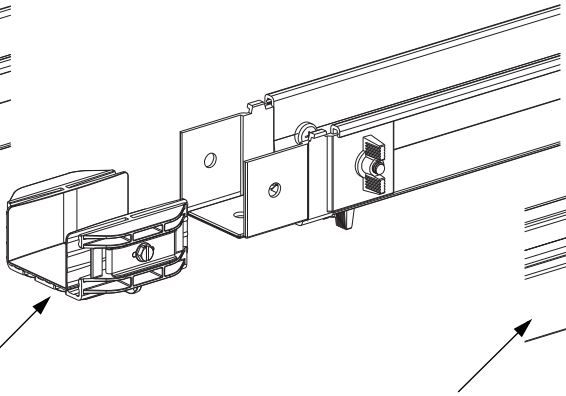

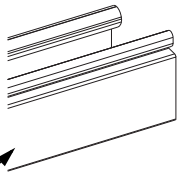

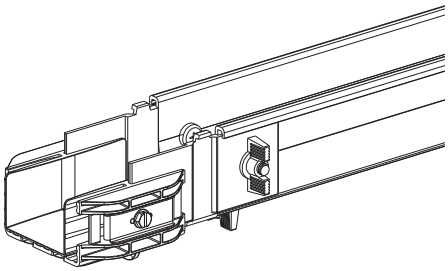

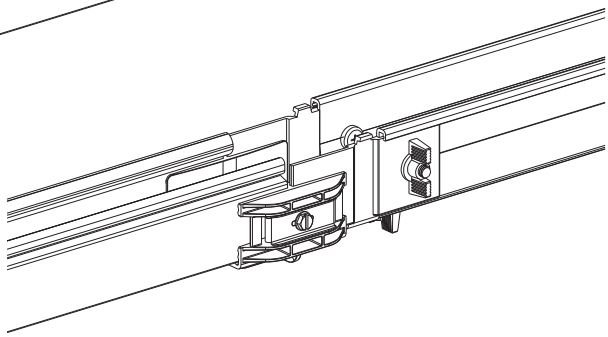

* Telect® is a registered trademark of Telect, Inc.

** WaveTrax™ Cable Management System is a registered trademark of Telect, Inc.

For Instructions in Local Languages and Technical Support:

www.panduit.com/resources/install_maintain.asp

www.panduit.com

E-mail:
techsupport@panduit.com

Phone:
866-405-6654