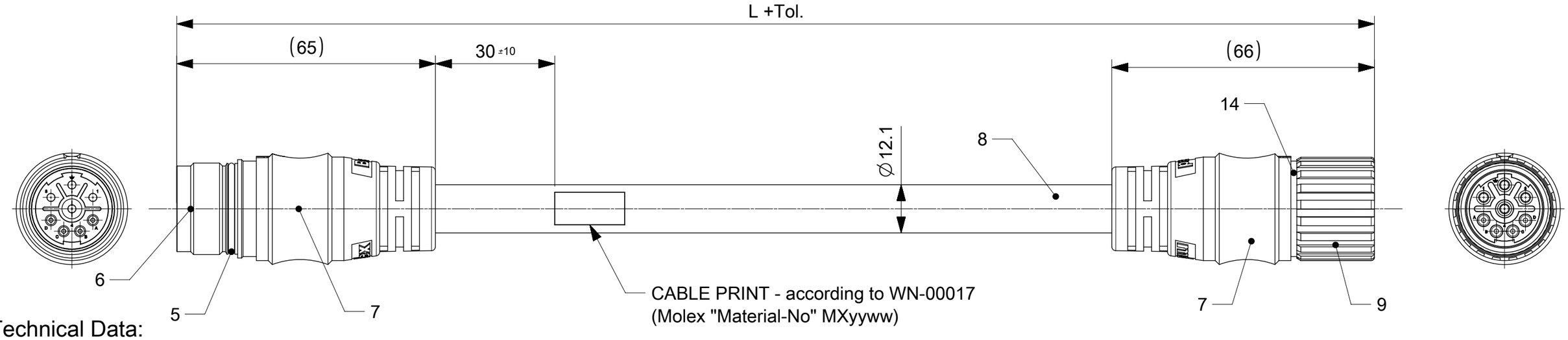

Technical Data:

Number of positions: 4 + 3 + PE

	Signal	Power
Number of contacts	4	4
Contact Ø [mm]	1	2
Nominal current [A]	12	18
Nominal voltage [V~]	300	600
Degree of pollution 3		
Test voltage [V~]	2500	3000

Max. contact resistance [mΩ]	3
Insulation resistance [MΩ]	> 10^{13}
Protection	IP 67 (connected)
Temperature range (fixed)	-40°C to 90°C
Temperature range (flex)	-25°C to 80°C

Packaging:
The cordsets delivered packed into carton without PE-bag.

Connector pin assignment
Plug M23 4+3+PE MA

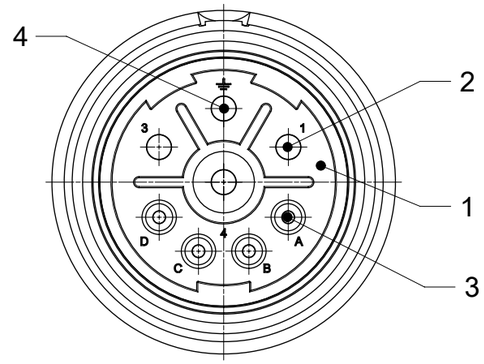

SCALE 2:1

Connector pin assignment
Plug M23 4+3+PE FE

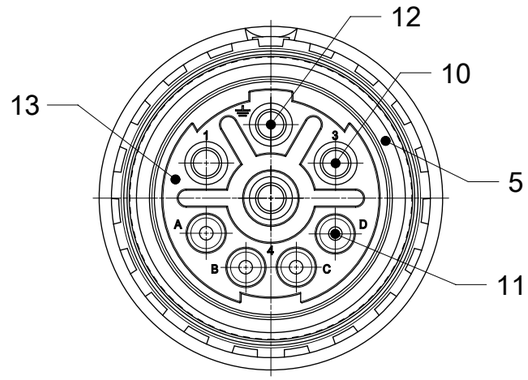

SCALE 2:1

TABLE 1

MOLEX P/N	ENGINEERING No.	L [mm]	Tol.[mm]
1204800588	KKP8S30W03M010	1000	+40
1204800589	KKP8S30W03M020	2000	+60
1204800590	KKP8S30W03M030	3000	+60
1204800591	KKP8S30W03M040	4000	+60
1204800592	KKP8S30W03M050	5000	+60
1204800593	KKP8S30W03M100	10000	+80
1204800594	KKP8S30W03M150	15000	+140
1204800595	KKP8S30W03M200	20000	+140

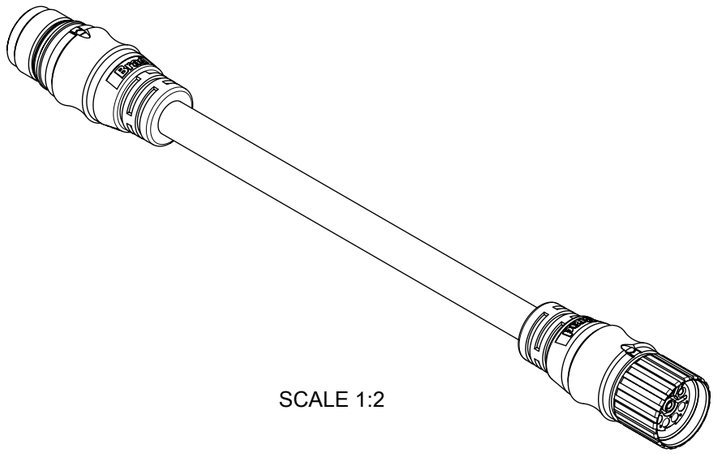

SCALE 1:2

THIS DRAWING CONTAINS INFORMATION THAT IS PROPRIETARY TO MOLEX ELECTRONIC TECHNOLOGIES, LLC AND SHOULD NOT BE USED WITHOUT WRITTEN PERMISSION

SYMBOLS: E/A = 0; E/C = 0; E/B = 0; S = 0; ▼ = 0; C = 0; ☒ = 0; ■ = 0; ▽ = 0

DIMENSION UNITS: mm — SCALE: 1:1

GENERAL TOLERANCES (UNLESS SPECIFIED)

ANGULAR TOL	±	1.0 °
4 PLACES	±	
3 PLACES	±	0.0
2 PLACES	±	0.05
1 PLACE	±	0.3
0 PLACES	±	0.5

DRAFT WHERE APPLICABLE MUST REMAIN WITHIN DIMENSIONS

CURRENT REV DESC:

EC NO: 627666
DRWN: SSM 2019/09/23
CHK'D: WORKFLOWGUY 2019/11/20
APPR: WORKFLOWGUY 2019/11/20

INITIAL REVISION:
DRWN: MSCHERER 2016/11/23
APPR: RSILLER 2016/11/24

THIRD ANGLE PROJECTION | DRAWING: A3-SIZE | SERIES: 120480

molex

CSE M23 8P PC MA STR WSOR FE XM 1,5 SHLD

PRODUCT CUSTOMER DRAWING

DOCUMENT NUMBER	DOC TYPE	DOC PART	REVISION
1204800588	PSD	000	A6

MATERIAL NUMBER	CUSTOMER	SHEET NUMBER
see table 1	GENERAL MARKET	1 OF 2

DOCUMENT STATUS	P1	RELEASE DATE	2019/11/20 12:48:03

FORMAT: master-tb-prod-A3
REVISION: H
DATE: 2018/01/18

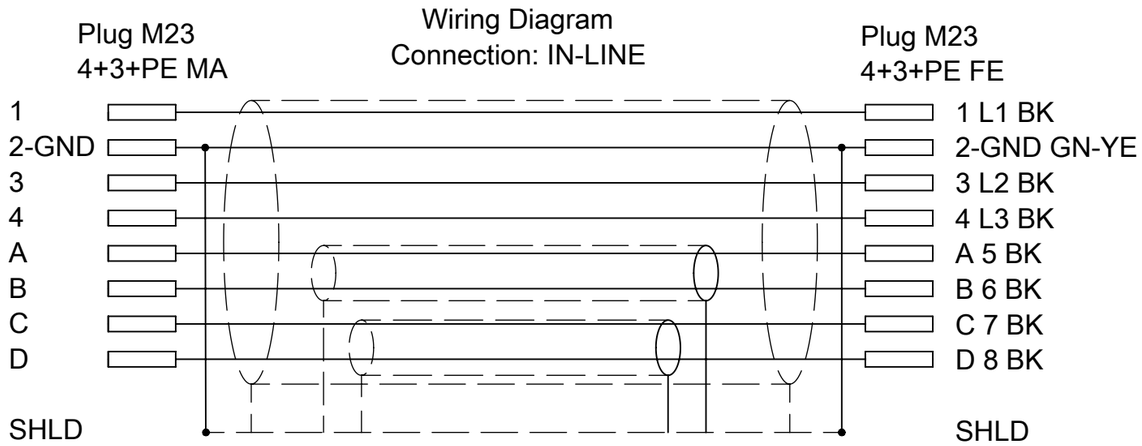

TABLE 2

POS	QTY	DESCRIPTION	MATERIAL	FINISH/COLOR
1	1	INSERT M23 MA	PA	BLACK
2	3	CONTACT 20 MA	COPPER ALLOY	GOLD OVER NICKEL
3	4	CONTACT 10 MA	COPPER ALLOY	GOLD OVER NICKEL
4	1	GROUNDING 20 MA	COPPER ALLOY	GOLD OVER NICKEL
5	2	GASKET OR	NBR	BLACK
6	1	SHELL M23 MA	BRASS	NICKEL PLATED
7	2	OVERMOLD	TPU	BLACK
8	1	CABLE	WSOR	ORANGE
9	1	NUT M23 FE	BRASS	NICKEL PLATED
10	3	CONTACT 20 FE	COPPER ALLOY	GOLD OVER NICKEL
11	4	CONTACT 10 FE	COPPER ALLOY	GOLD OVER NICKEL
12	1	GROUNDING 20 FE	COPPER ALLOY	GOLD OVER NICKEL
13	1	INSERT M23 FE	PA	BLACK
14	1	SHELL M23 FE	BRASS	NICKEL PLATED

DOCUMENT STATUS	P1	RELEASE DATE	2019/11/20 12:48:03

FORMAT: master-Sized-A3
REVISION: H
DATE: 2018/01/18

SYMBOLS: E/W = 0; E/C = 0; E/F = 0; S = 0; ▼ = 0; C = 0; ☒ = 0; ■ = 0; ▽ = 0

THIS DRAWING CONTAINS INFORMATION THAT IS PROPRIETARY TO MOLEX ELECTRONIC TECHNOLOGIES, LLC AND SHOULD NOT BE USED WITHOUT WRITTEN PERMISSION

DIMENSION UNITS	SCALE
mm	1:1

GENERAL TOLERANCES (UNLESS SPECIFIED)

ANGULAR TOL	±	1.0 °
4 PLACES	±	
3 PLACES	±	0.0
2 PLACES	±	0.05
1 PLACE	±	0.3
0 PLACES	±	0.5

DRAFT WHERE APPLICABLE MUST REMAIN WITHIN DIMENSIONS

CURRENT REV DESC:

EC NO: 627666
DRWN: SSM 2019/09/23
CHK'D: WORKFLOWGUY 2019/11/20
APPR: WORKFLOWGUY 2019/11/20

INITIAL REVISION:
DRWN: MSCHERER 2016/11/23
APPR: RSILLER 2016/11/24

THIRD ANGLE PROJECTION | DRAWING: A3-SIZE | SERIES: 120480

molex

CSE M23 8P PC MA STR WSOR FE XM 1,5 SHLD

PRODUCT CUSTOMER DRAWING

DOCUMENT NUMBER	DOC TYPE	DOC PART	REVISION
1204800588	PSD	000	A6

MATERIAL NUMBER	CUSTOMER	SHEET NUMBER
see table 1	GENERAL MARKET	2 OF 2