THIS COPY IS PROVIDED ON A RESTRICTED BASIS AND IS NOT TO BE USED IN ANY WAY DETRIMENTAL TO THE INTERESTS OF PANDUIT CORP.

PANDUIT PART NUMBER	WEIGHT
CVPTB1X4	.15 LBS/EACH 68.04 GRAMS/EACH

NOTES:

1. FOR USE WITH NET-ACCESS S-TYPE DYNAMIC CABINETS.
2. USED TO SEAL OFF 1" X 4" CABINET PASS THRU OPENINGS WHEN CABLES ARE ROUTED FROM THE FRONT OF THE CABINET THROUGH THE VERTICAL BLANKING PANELS TO THE REAR.
3. EACH PASS THRU COOL BOOT ASSEMBLY INCLUDES: TWO (2) M5 X 0.8 X 12mm BUTTON HEAD SERRATED SCREW WITH A T25 TORX DRIVE.
4. FINISH COLOR: BLACK
5. DIMENSION IN PARENTHESES ARE IN INCHES.

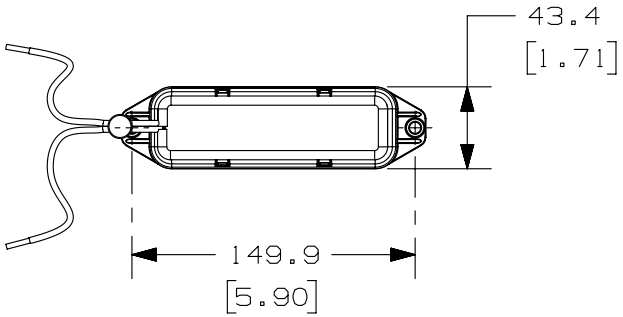

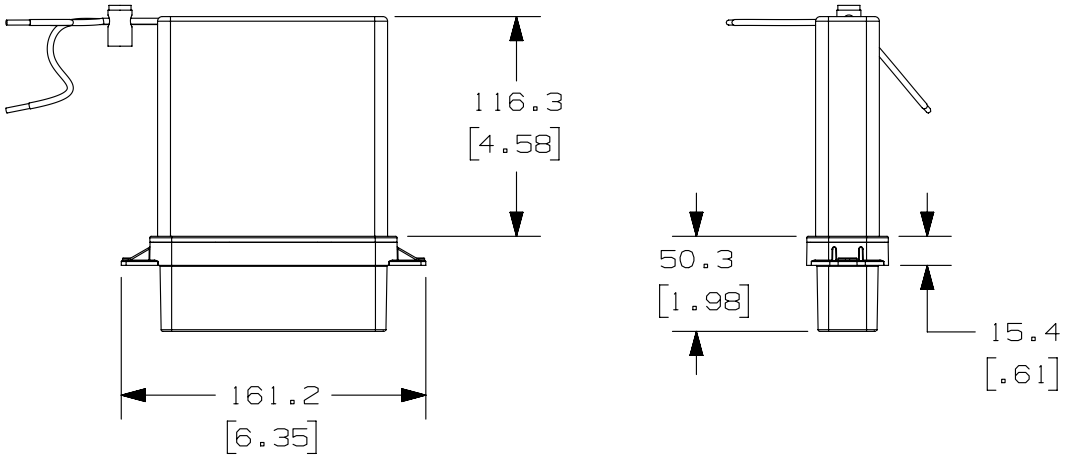

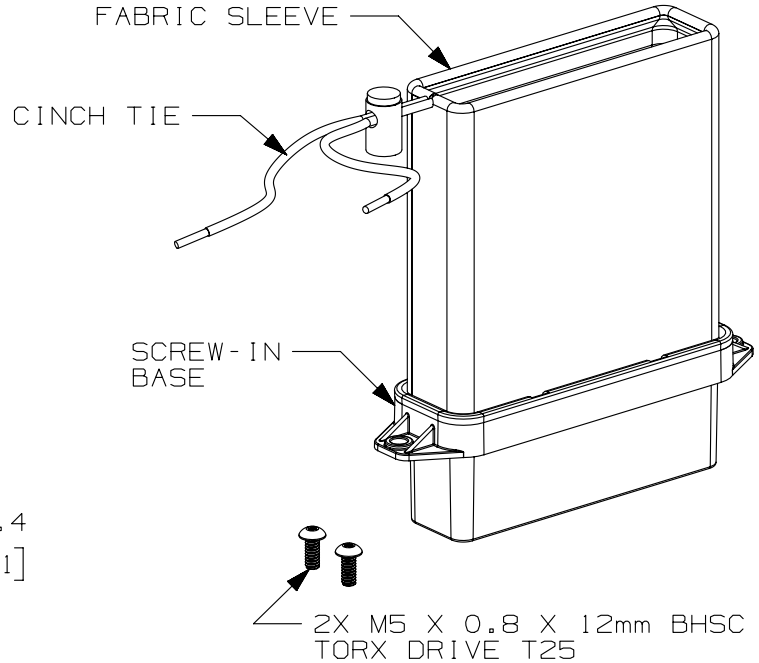

REV	DATE	BY	CHK	APR	DESCRIPTION	ECN
00A	09-16-14	SSP	DWR	MWH	RELEASED TO PRODUCTION	12V356TK-DC

TITLE

PASS THRU COOL BOOT ASSEMBLY (CVPTB1X4)

CUSTOMER DRAWING

ITEM REVISION NAME: 12V356TK/00

DATASET FILE NAME: 12V356TK_DC/00A CVPTB1X4

UNLESS OTHERWISE SPECIFIED, DIMENSIONAL TOLERANCES ARE: IN [mm]

.X ± .1 [2.54] .XXX ± .005 [.127]

.XX ± .01 [.25] ANGLES ± 5 °

THIRD ANGLE PROJECTION

MATERIAL: N/A

DRAWING NUMBER: 12V356TK-DC

DRAWN BY	DATE	CHK	SCALE		SIZE
SSP	09-16-14	DWR	NONE	SHT 1 OF 1	A