

STUDIO BAGNO

Acqua 45

STYLE

Wall / Inset

CODE

SB4550/0
SB4550/1
SB4550/3

WEIGHT & CAPACITY

20 kg, 18 litres

COLOURS

White Gloss

OVERFLOW & WASTE

32mm overflow plug & waste not included.
Suitable for bathroom & laundry applications.

RECOMMENDED PLUG & WASTE

SBW003

INCLUSIONS

Wall fixing bolts included.

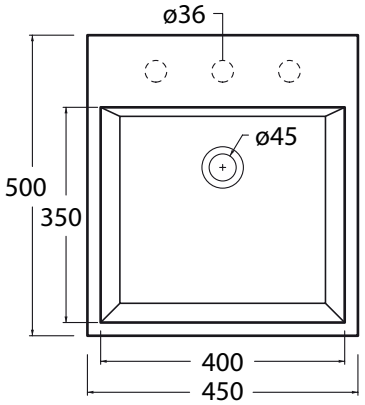

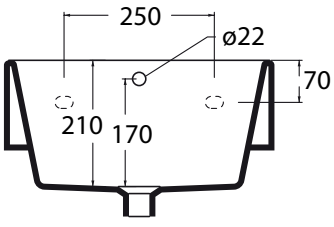

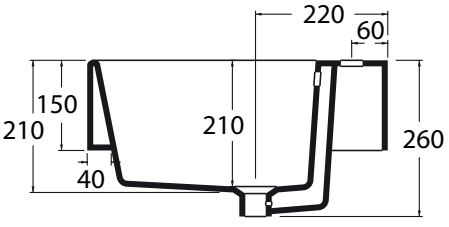

Note: All dimensions are in millimetres and are subject to normal manufacturing variances. Studio Bagno Pty Ltd reserves the right to vary specifications at any time without notice. **Date created:** 14/02/13.