STUDIO BAGNO

MANHATTAN MINI

STYLE

Undercounter Basin

CODE

SB8089

COLOURS

Gloss White

OVERFLOW & WASTE

32 mm non-overflow plug & waste not included

RECOMMENDED PLUG & WASTE

SBW003

NOTES

Brackets included

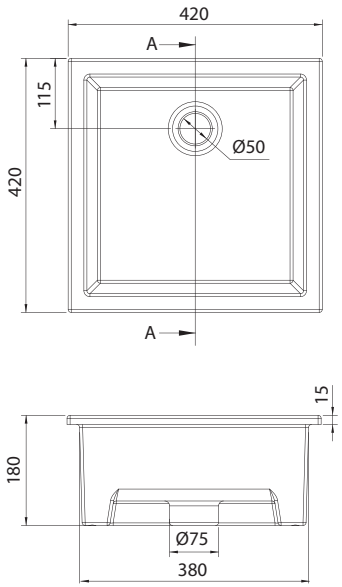

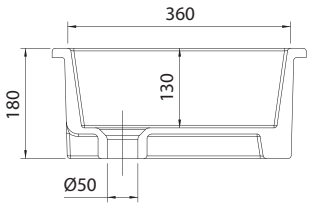

Note: All dimensions are in millimetres and are subject to normal manufacturing variances.
Studio Bagno Pty Ltd reserves the right to vary specifications at any time without notice. Date created: 15/01/2019