STUDIO BAGNO

Pop

STYLE

Undercounter

CODE

SBTP730

WEIGHT

9.4 kg

COLOURS

White

OVERFLOW & WASTE

32mm overflow plug & waste not included.

RECOMMENDED PLUG & WASTE

SBW003

CAPACITY

12 Litres

NOTES

Brackets included

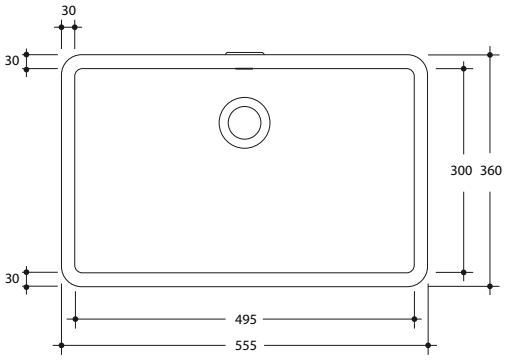

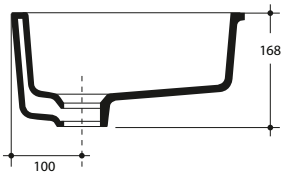

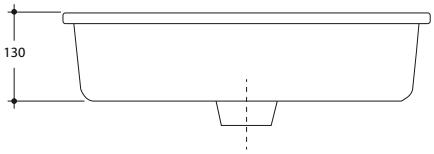

Note: All dimensions are in millimetres and are subject to normal manufacturing variances. Studio Bagno Pty Ltd reserves the right to vary specifications at any time without notice.