STUDIO BAGNO

Nova

STYLE

Console

CODE

1TH (NOVA/1)
3TH (NOVA/3)

WEIGHT

27 kg

COLOURS

White, Not glazed at rear.

OVERFLOW & WASTE

32mm overflow plug and waste not included.

RECOMMENDED PLUG & WASTE

SBW003

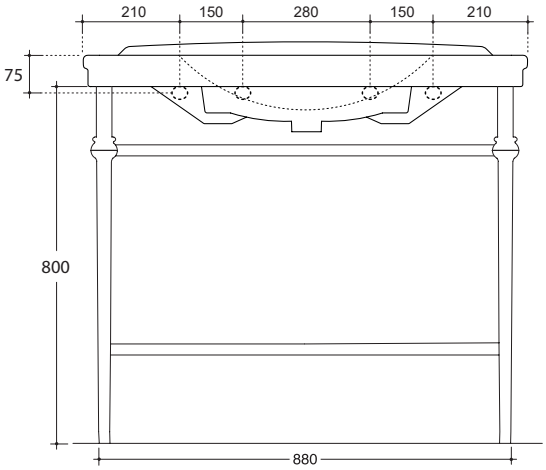

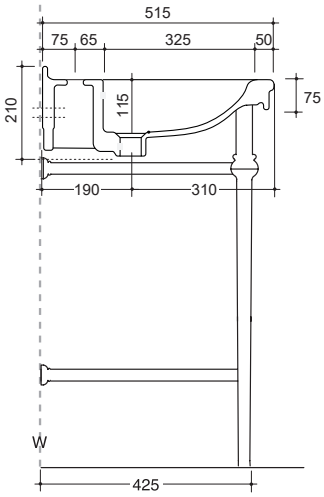

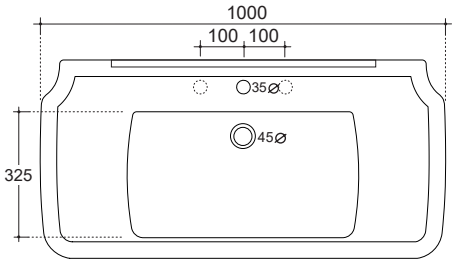

Note: All dimensions are in millimetres and are subject to normal manufacturing variances. Studio Bagno Pty Ltd reserves the right to vary specifications at any time without notice. Date created: 08/11/13.