IMPERO 60

STYLE

Inset

CODE

IMP4060

WEIGHT

15 kg

COLOURS

White

OVERFLOW & WASTE

32 mm overflow plug & waste not included.

RECOMMENDED PLUG & WASTE

SBW006

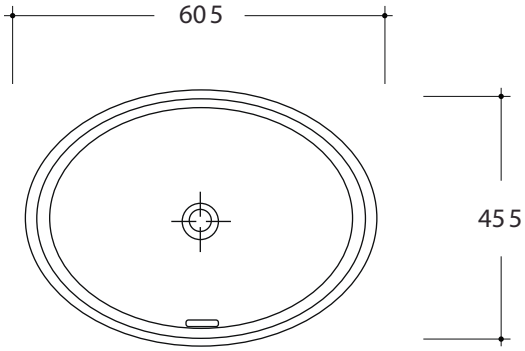

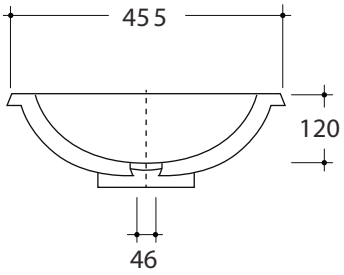

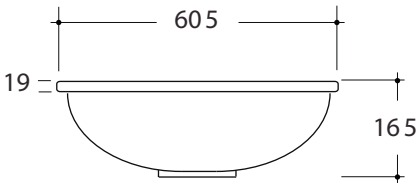

Note: All dimensions are in millimetres and are subject to normal manufacturing variances. Studio Bagno Pty Ltd reserves the right to vary specifications at any time without notice. Date created: 18/02/16.