STUDIO BAGNO

Pencil Circle

STYLE

Bench Mounted Basin

CODE

0TH - PENC1

COLOURS

Gloss White
Matte White
Matte Black
Premium Colours

OVERFLOW & WASTE

32mm Non - Overflow Plug & Waste not included

RECOMMENDED PLUG & WASTE

SBW003

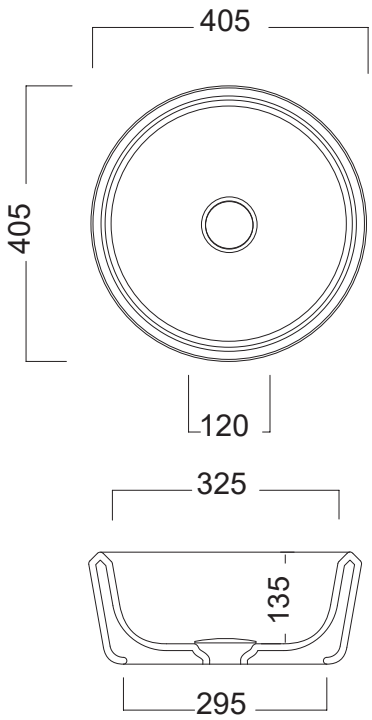

Note: All dimensions are in millimetres and are subject to normal manufacturing variances. Studio Bagno reserves the right to alter dimensions at any time. Physical Product must be proofed and measurements confirmed before any alteration to installation area is conducted.
Date created: 14/04/2025