STUDIO BAGNO

LAGO 1700

STYLE

Freestanding Bath

CODE

SB6580/SGW
SB6580/MW

COLOUR

Matte white, or Semi gloss white

WEIGHT

108 Kg

OVERFLOW & WASTE

Overflow & waste included

RECOMMENDED PLUG & WASTE

SBW009/MW
SBW009/SGW
Included as standard w/ bath

MATERIAL

Solid Surface

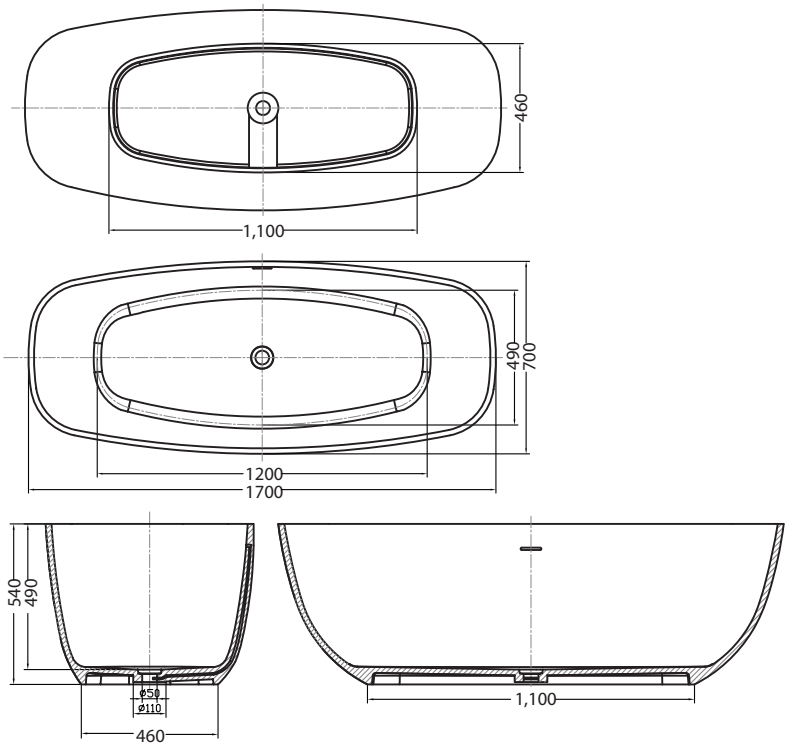

Note: All dimensions are in millimetres and are subject to normal manufacturing variances. Studio Bagno Pty Ltd reserves the right to vary specifications at any time without no tice. Date created: 14/05/2020