

STUDIO BAGNO

Rimless | 4 Star Efficiency

Hyde

STYLE

Rimless Wall Faced Pan

CODE

HYD002

COLOUR

Gloss White

INCLUSIONS

Connector, Soft Close Seat
N.B. S-Trap connector supplied as standard

NOTES

- Powerful yet efficient Rimless Flush
- CleanMax Anti-Bacterial Glaze
- Set-Out (S-Trap) - 95 mm
- Set-Out (P-Trap) - 180 mm
- WELS 4-Star Rating

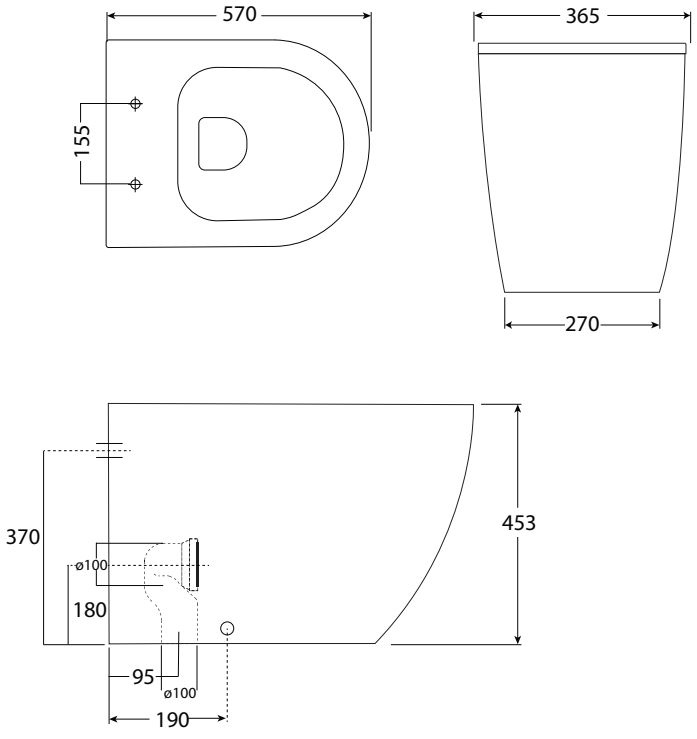

*140mm Set-Out achievable with Offset

Note: All dimensions are in millimetres and are subject to normal manufacturing variances. Physical Product must be proofed and measurements confirmed before any alteration to installation area is conducted. Studio Bagno reserves the right to alter dimensions at any time. Datecreated:17/04/2025

STUDIO BAGNO



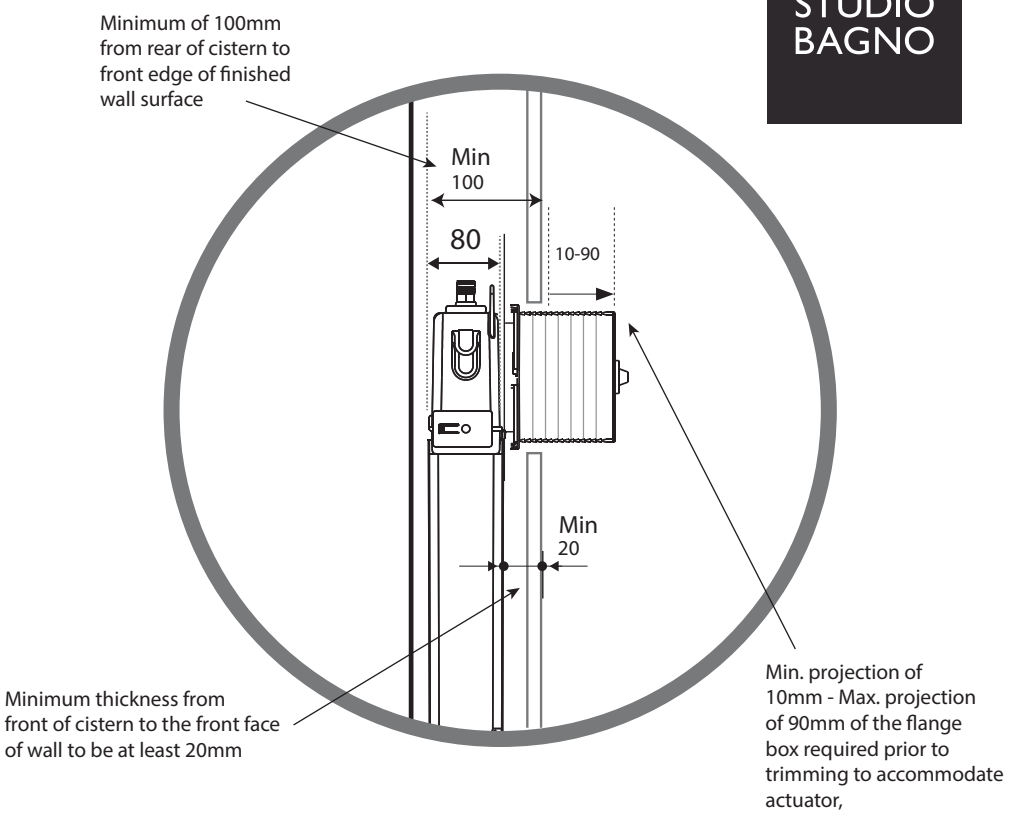

Oli 74

Product Type

In-Wall Cistern

CODE

601602/MC- (Mechanical)
601602/PN- (Pneumatic)

WEIGHT

3.5 kg

FEATURES

- Compatible with all Oli Actuator Plates
- Front Access
- Dual Flush with 4.5/3 Litre Flush
- 100mm min, wall cavity required
- 10 year Warranty
- Factory Flush Tested
- Made in Portugal
- Mechanical actuator kit included
- Delayed Refill valve saves 0.5L every flush

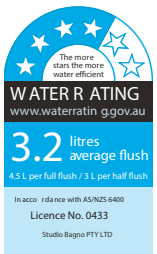

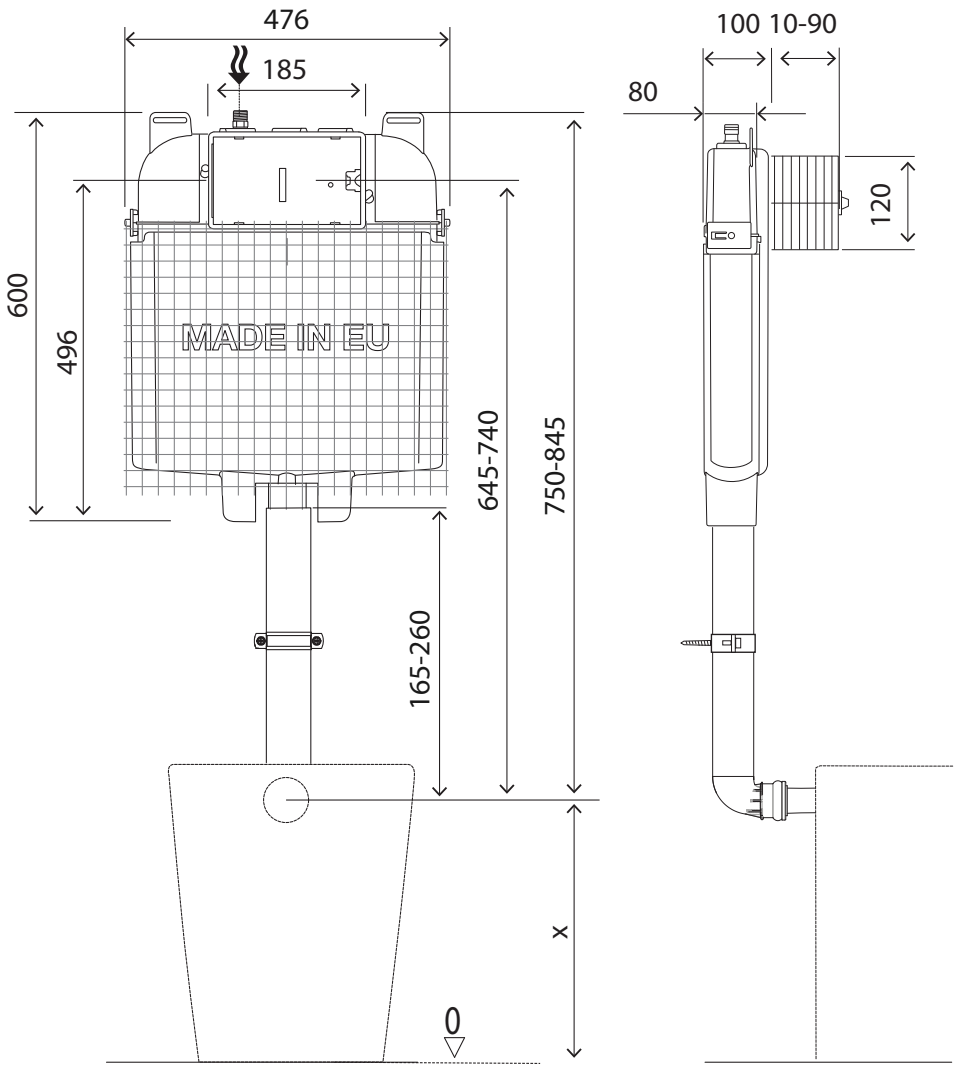

Note: All dimensions are in millimetres and are subject to normal manufacturing variances. Physical Product must be proofed and measurements confirmed before any alteration to installation area is conducted. Studio Bagno reserves the right to alter dimensions at any time. Datecreated: 29/07/2024