

STUDIO BAGNO

CLEANMAX
ANTI-BACTERIAL
SELF CLEANING GLAZE

MANHATTAN

STYLE

Wall Faced Pan

CODE

MAN002

WEIGHT

38.5 kg

COLOURS

White

INCLUSIONS

Connector, soft close seat and fixings included.

Rimless

Notes

Set out 110 mm (S-Trap)
Suitable for S-Trap or P-Trap Installation.

Cleanmax nanotech anti-bacterial surface technology.

SIDE VIEW

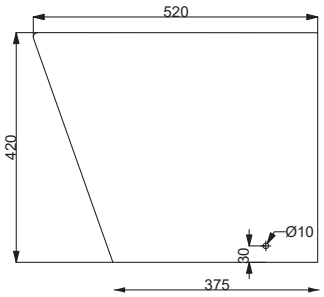

FRONT VIEW

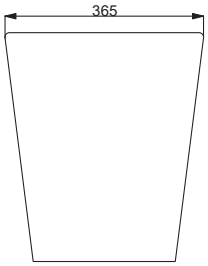

BACK VIEW

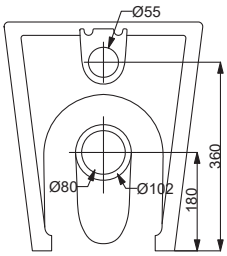

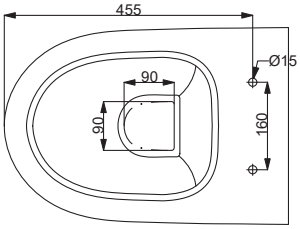

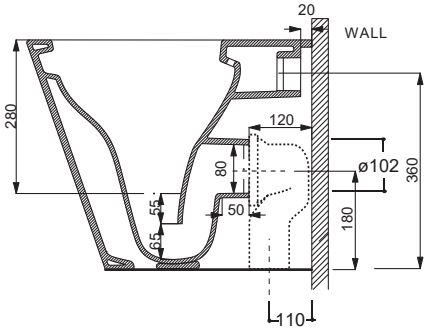

Note: All dimensions are in millimetres and subject to normal manufacturing variance. Studio Bagno Pty Ltd reserves the right to vary specifications at any time without notice. Date created: 18/03/21

STUDIO BAGNO



NOTE

See next page for compatible actuators

Minimum of 100mm from rear of cistern to front edge of finished wall surface

Min. projection of 10mm - Max. projection of 80mm of tile flange box required prior to trimming to accommodate actuator.

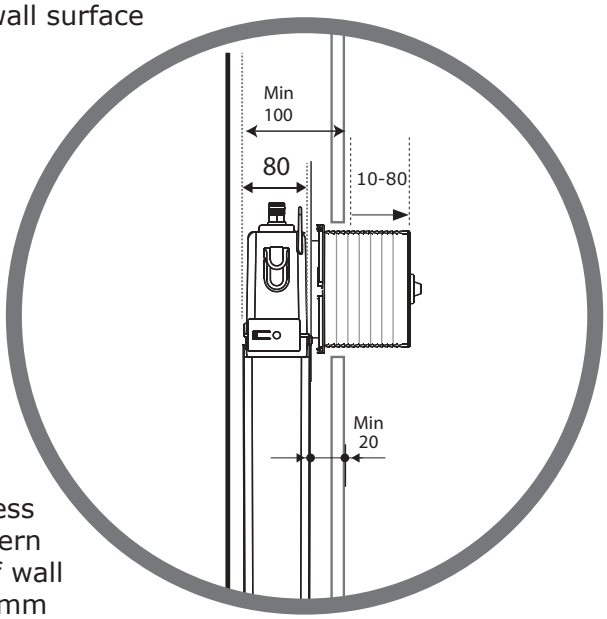

Minimum thickness from front of cistern to the front face of wall to be at least 20mm

Oli-74

IN-WALL CISTERN

STYLE

In Wall Cistern

CODE

601602/MC
(if used with mechanical actuators)

601602/PN
(if used with pneumatic actuators)

WEIGHT

3.5 kg

FEATURES

- Front access only
- Dual flush in-wall cistern with 4.5/3 litre flush
- 80mm min. wall cavity requirement
- 10 Year Warranty
- Manufactured in Europe
- Mechanical actuator kit included

Front View

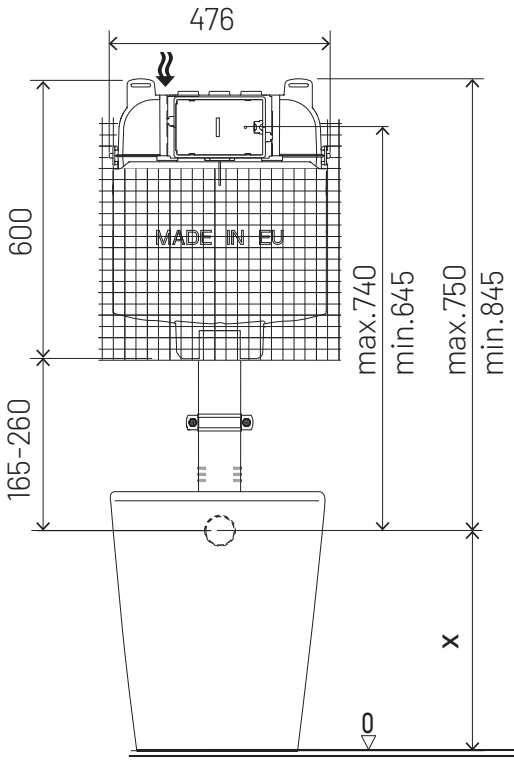

Side View

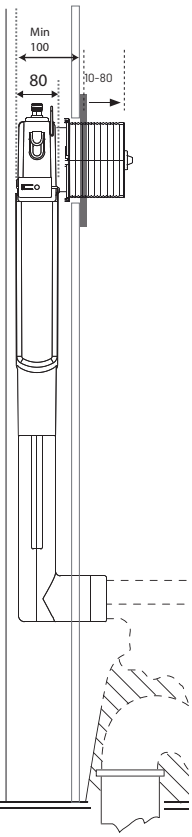

WELS RATING



Note: All dimensions a re in millimet res and a re subject to normal manufacturing variances.
Studio Bagno Pty Ltd reserves the right to vary specifications at any time without notice. Date c reated: 11/12/2020

STUDIO BAGNO

COMPATIBLE ACTUATORS

Oli 74
IN-WALL CISTERN

Cistern Code by Actuator

					
GLAM	GLOBE	OCEANIA	OCEANIA MIA	PLAIN	SLIM
601602/MC	601602/MC	601602/MC	601602/MC	601602/MC	601602/MC

				
BLINK	TREND	SPHERA +	SPHERA -	KARISMA
601602/PN	601602/PN	601602/PN	601602/PN	601602/PN