Art. Y111BU+M011AU

Wall-mount washbasin mixer

- 7 7/8” spout projection
- Handle included
- Water flow restricted to 1.2 GPM
- 1/2” inlets

Drain to be ordered separately: please select #9865U, #W095U or #W097U.

Project:

Room:

Date:

Comments:

External piece
Finishes:

- ☐ **Matte Gun Metal PVD** 33 P5 Y111BU
- ☐ **Brushed Stainless steel** 33 93 Y111BU

Built-in piece
Finishes:

- ☐ 44 00 M011AU

5 l/min aerator
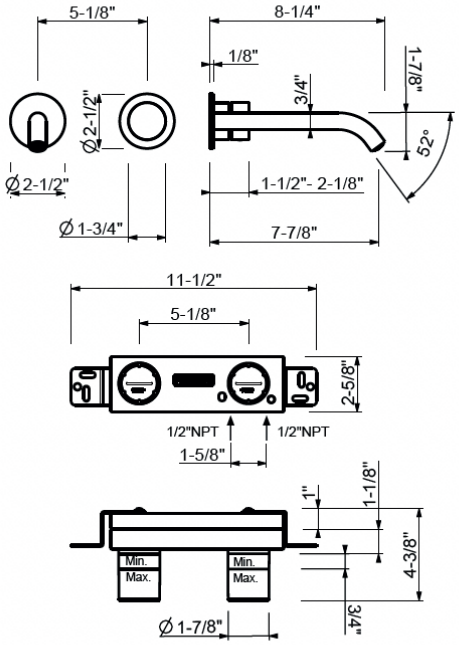
Pressure (bar)	flow rate (l/min)
0,5	2,32
1	4,1
2	5,1
3	5,54
4	5,47