ABOUTWATER AL/23

Basin mixer with remote control Art. B106WU

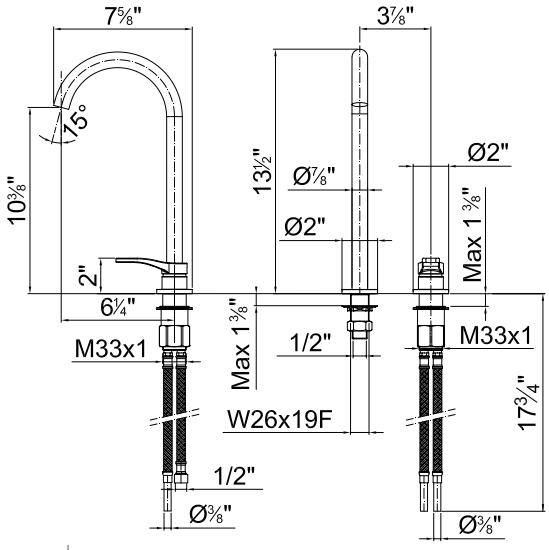
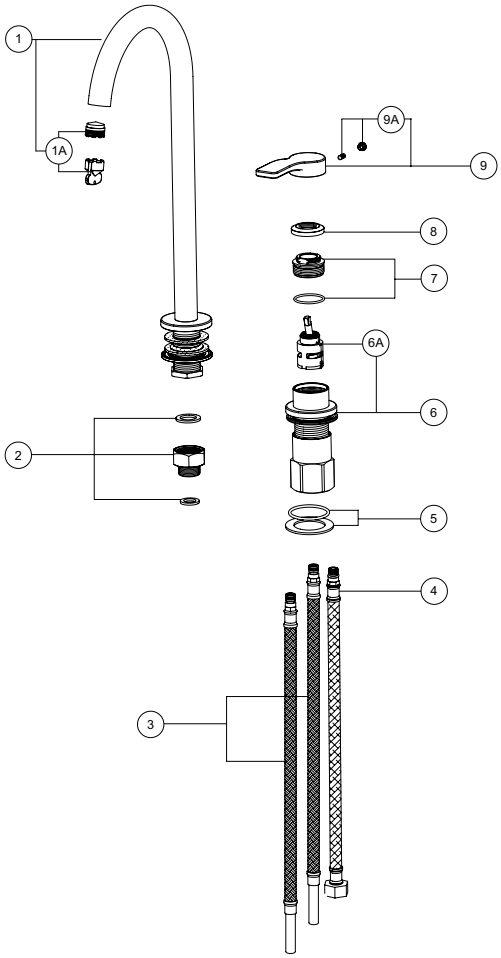
N°	Code	Description
1	90 00 8545U	**Complete spout for Art. B204WF**
1A	90 00 8632U	**Aerator cachè M18,5x1 5l/m with key**
2	90 00 8523	**Reduction with seals for Art. A104WF-A106WF-A107WF**
3	90 02 9331U	**Pair of M10x1-F3/8" flexible connections for Nostromo Small 40 cm.**
4	90 02 9109U	**Pair of flexible connections for spout**
5	90 00 8524	**Gasket with o'ring for Art. A104WF-A106WF-A107WF**
6	90 00 8551	**Complete body mixer for Art. B104WF**
6A	90 00 B070	**D. 25 cartridge for Art.B004WF-B006WF-B003WF-B104WF-B106WF-B008WF**
7	90 00 9328U	**Locking ring nut Nostromo Small cartridge**
8	90 00 8550	**Cup under handle for Art.B004WF**
9	90 00 8552	**Complete handle for Art. B104WF-B106WF**
9A	90 00 9533	**Fixing kit for valve handle Art. 3903S**