Art. B267

Deck-mount bathtub mixer

- without spout
- handles
- 4-hole
- 2-way diverter with pushing button
- FIT handshower
- 150 cm flexible
- 90° ceramic cartridge
- 3/4" inlets
- flexible supply lines

Finishes:

☐	**Chrome**	26 02 B267
☐	**Matt Black**	26 13 B267
☐	**Matt White**	26 29 B267

Project:

Room:

Date:

Comments:

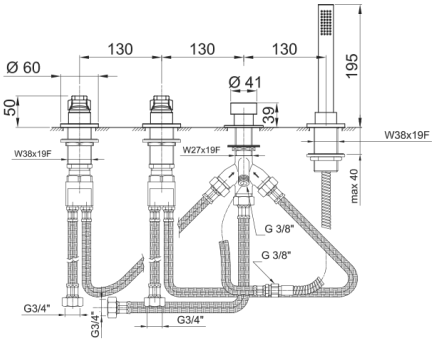

Certifications/Awards:

BELGAQUA

ATTESTATION DE CONFORMITÉ SANITAIRE ACS