Art. A006WF

Single-hole high washbasin mixer

- h. 26,4 cm
- spout projection 15,5 cm
- handle
- flow restrictor 5 l/min at 3 bar
- flexible supply lines
- WITHOUT WASTE

Project:

Room:

Date:

Comments:

Finishes:

☐	**Chrome**	27 02 A006WF
☐	**Matt Gun Metal PVD**	27 P5 A006WF
☐	**Matt British Gold PVD**	27 P6 A006WF
☐	**Matt Copper PVD**	27 P9 A006WF
☐	**Brushed Stainless Steel**	27 93 A006WF

5 l/min aerator

Pressure (bar)	flow rate (l/min)
0,5	2,34
1	5,09
2	5,1
3	5,38
4	5,39

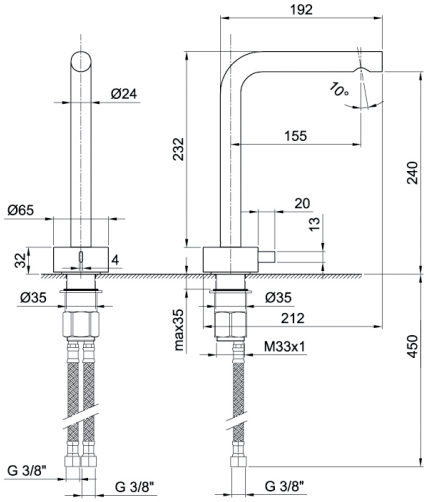

Certifications/Awards:

lead free

ATTESTATION DE CONFORMITÉ SANITAIRE ACS