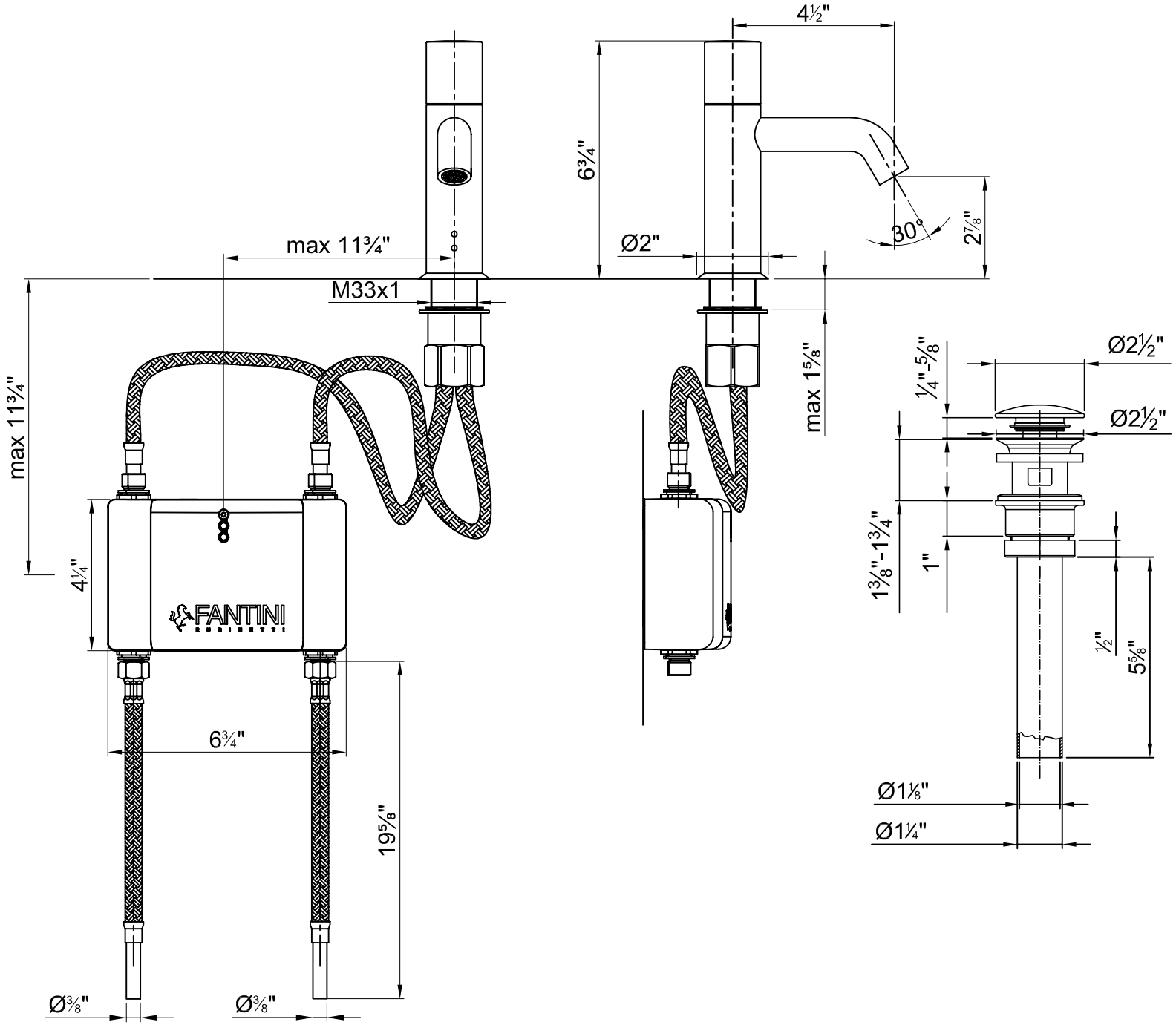

FANTINI RUBINETTERIE	Item: SINGLE-HOLE ELECTRONCIC WASHBASIN MIXER ITEM 2504WU	Data : 01/03/2011 Rev. 0

This drawing is intellectual property of Fantini SpA. No use or disclosure, either fully or partially, to third parties is allowed without prior consent of the company