VENEZIA BY VENINI

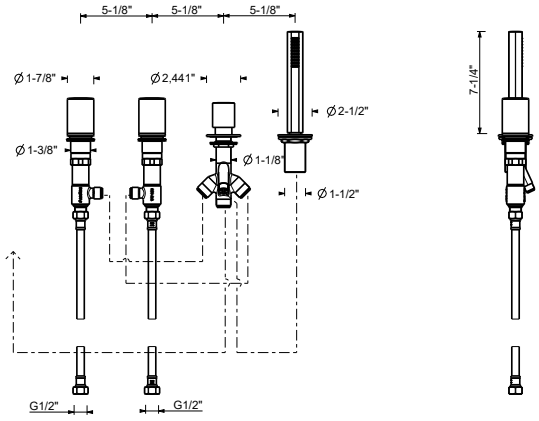

ART. S767SU

4-Hole Roman tub set

- Without spout
- Hexagonal handshower with anti-siphon check valve
- 58'' metal hose
- Diverter
- Max 8 gpm @ 60 psi
- Water flow restricted to 1.8 gpm for handshower

Note: Handles (2 PCS required) to be ordered separately, ple ase refer to the ''Handles'' section.

Date

Project/Comments:

Finishes

☐ Chrome	29 02 S767SU
☐ Polished Nickel PVD	29 95 S767SU
☐ Matte Gun Metal PVD	29 P5 S767SU
☐ Matte British Gold PVD	29 P6 S767SU
☐ Matte Copper PVD	29 P9 S767SU
☐ Gold Plus	29 01 S767SU