ICONA CLASSIC

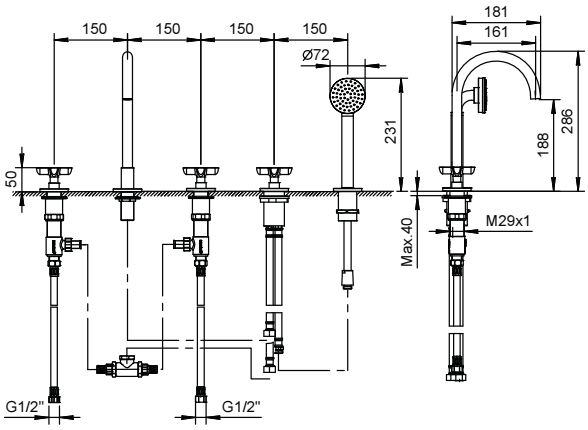

ART. R065

Deck-mount bathtub mixer

- spout projection 16 cm
- handles
- 5-hole
- 2-way diverter with turning knob
- ICONA handshower
- 150 cm flexible
- 90° ceramic cartridge
- 1/2" inlets
- flexible supply lines

Date

Project/Comments:

Finishing:

☐ Chrome	53 02 R065
☐ Matt Black	53 13 R065
☐ Polished Nickel PVD	53 95 R065
☐ Matt Gun Metal PVD	53 P5 R065
☐ Matt British Gold PVD	53 P6 R065
☐ Matt Copper PVD	53 P9 R065
☐ Deep Black PVD	53 S1 R065
☐ Pure Brass PVD	53 Q7 R065
☐ Raw Metal PVD	53 Q8 R065

• Integrated aerator

Pressure(bar)	Flow rate (l/min)
0.5	7.2
1	11.56
2	16.59
3	20.5
4	23.55

• handshower

Pressure(bar)	Flow rate (l/min)
0.5	4.16
1	5.85
2	8.15
3	9.25
4	8.52