ICONA CLASSIC

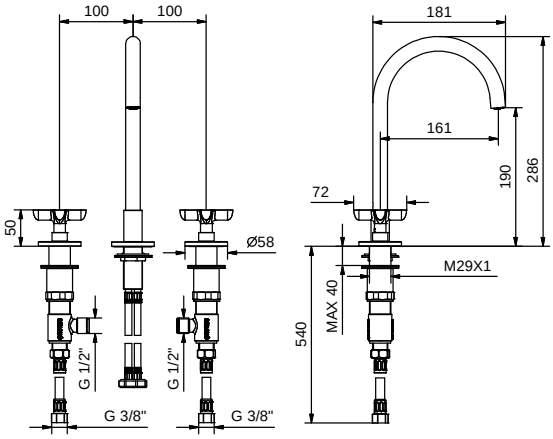

ART. R007W

3-hole washbasin mixer

- spout projection 16 cm
- handles
- flow restrictor 5 l/min at 3 bar
- 90° ceramic cartridge
- flexible supply lines
- WITHOUT WASTE

Date

Project/Comments:

• Integrated aerator

Pressure(bar)	Flow rate (l/min)
0.5	2.34
1	3.81
2	5.09
3	5.1
4	5.38

Finishing:

☐ Chrome	53 02 R007W
☐ Matt Black	53 13 R007W
☐ Polished Nickel PVD	53 95 R007W
☐ Matt Gun Metal PVD	53 P5 R007W
☐ Matt British Gold PVD	53 P6 R007W
☐ Matt Copper PVD	53 P9 R007W
☐ Deep Black PVD	53 S1 R007W
☐ Pure Brass PVD	53 Q7 R007W
☐ Raw Metal PVD	53 Q8 R007W