NICE

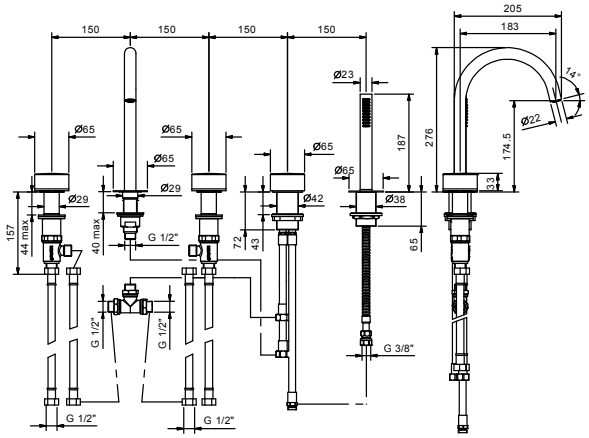

ART. S065S

Deck-mount bathtub mixer

- spout projection 18,3 cm
- without handles
- 5-hole
- 2-way diverter with turning knob
- FIT handshower
- 150 cm flexible
- 90° ceramic cartridge
- 1/2'' inlets
- flexible supply lines

NOTE: handles to be ordered separarely,pls. refer to the ''H andles'' section

Finishing:

☐ Chrome 65 02 S065S
☐ Matt Black 65 13 S065S

Date

Project/Comments:

• Integrated aerator

Pressure(bar)	Flow rate (l/min)
0.5	7.2
1	11.56
2	16.59
3	20.5
4	23.55

• handshower

Pressure(bar)	Flow rate (l/min)
0.5	4.16
1	5.85
2	8.15
3	9.25
4	8.52