AL/23

ABOUTWATER
Boffi FANTINI

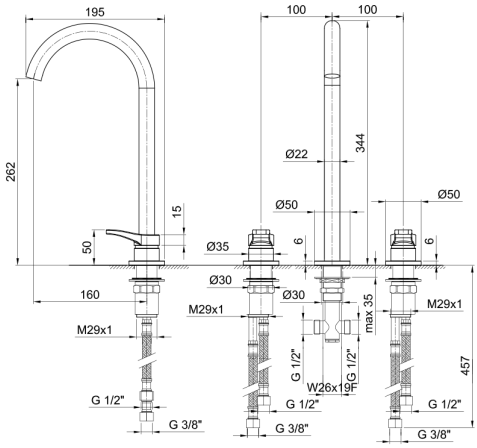

ART. B206WF

3-hole high washbasin mixer

- spout projection 16 cm
- handles
- flow restrictor 5 l/min at 3 bar
- 90° ceramic cartridge
- flexible supply lines
- WITHOUT WASTE

Date

Project/Comments:

Finish:

☐ Chrome 26 02 B206WF
☐ Matt Black 26 13 B206WF

• Integrated aerator

Pressure(bar)	Flow rate (l/min)
0.5	3.5
1	4.7
2	5.5
3	5.6
4	5.64