FONTANE BIANCHE

FONTANE BIANCHE SALVATORI DAL 1946 + FANTINI RUBINETTI

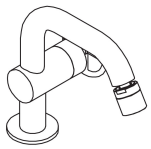

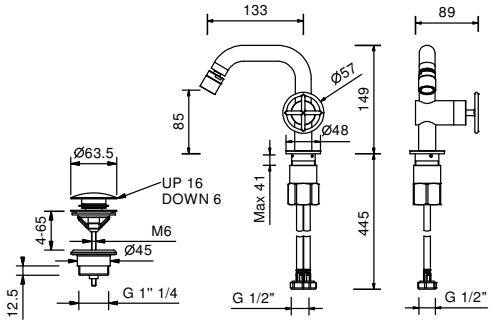

ART. P008

Single-hole bidet mixer

- spout projection 13,4 cm
- handle
- flow restrictor 5 l/min at 3 bar
- articulated aerator
- flexible supply lines
- WITH pop-up WASTE

Date

Project/Comments:

Finishing:

☐ Matt Gun Metal PVD 47 P5 P008

• articulated aerator

Pressure(bar)	Flow rate (l/min)
0.5	3.5
1	4.7
2	5.5
3	5.6
4	5.64